MedStar Health

# MedStar Southern Maryland Hospital Center

## Response to Request for Additional Information

November 21, 2013

MedStar Health

5565 Sterrett Place
5th Floor
Columbia, MD 21044
410-772-6500 PHONE
410-715-3754 FAX
medstarhealth.org

November 21, 2013

Ms. Ruby Potter
Health Facilities Coordinator
Maryland Health Care Commission
4160 Patterson Avenue
Baltimore, Maryland 21215

MedStar Southern Maryland Hospital Center
Certificate of Need Application #13-16-2350

Dear Ms. Potter:

Enclosed please find the responses of MedStar Southern Maryland Hospital Center to the request for completeness and additional information in the above referenced certificate of need application.

Sincerely,

Patricia G. S. Cameron
Senior Policy Analyst

cc: Pamela B. Creekmur, Health Officer, Prince George's County
Thomas Dame, Gallagher Evelius & Jones

MedStar Southern Maryland
Hospital Center

7503 Surratts Rd
Clinton, MD 20735
301-868-8000 PHONE
medstarsouthernmaryland.org

Affirmation Statement

I hereby declare and affirm under the penalties of perjury that the facts stated in this application and its attachments are true and correct to the best of my knowledge, information and belief.

Richard G. McAlee
(signature)

Richard G. McAlee
(print name)

20 Nov. 2013
(date)

Affirmation Statement

I hereby declare and affirm under the penalties of perjury that the facts stated in this application and its attachments are true and correct to the best of my knowledge, information and belief.

Charles R. Stewart

(signature)

CHARLES R. STEWART

(print name)

11/19/13

(date)

MedStar Southern Maryland
Hospital Center

7503 Surratts Rd.
Clinton, MD 20735
301-868-8000 PHONE
medstarsouthernmaryland.org

Affirmation Statement

I hereby declare and affirm under the penalties of perjury that the facts stated in this application and its attachments are true and correct to the best of my knowledge, information and belief.

Grant A. McClure
(signature)

GRANT A. McCLURE
(print name)

11/20/13
(date)

MedStar Southern Maryland
Hospital Center

7503 Surratts Rd.
Clinton, MD 20735
301-868-8000 PHONE
medstarsouthernmaryland.org

Affirmation Statement

I hereby declare and affirm under the penalties of perjury that the facts stated in this application and its attachments are true and correct to the best of my knowledge, information and belief.

(signature)

Donald G. Clarkson
(print name)

11/20/13
(date)

MedStar Southern Maryland
Hospital Center

7503 Surratts Rd
Clinton, MD 20735
301 868-8000 PHONE
medstarsouthernmaryland.org

Affirmation Statement

I hereby declare and affirm under the penalties of perjury that the facts stated in this application and its attachments are true and correct to the best of my knowledge, information and belief.

Lynn Boode
(signature)

LYNN BOOE
(print name)

11/20/13
(date)

MedStar Southern Maryland
Hospital Center

7503 Surratts Rd
Clinton, MD 20735
301-868-8000 PHONE
medstarsouthernmaryland.org

Affirmation Statement

I hereby declare and affirm under the penalties of perjury that the facts stated in this application and its attachments are true and correct to the best of my knowledge, information and belief.

Reba McVay
(signature)

Reba McVay
(print name)

11/20/13
(date)

MedStar Southern Maryland
Hospital Center

7503 Surratts Rd
Clinton, MD 20735
301-868-8000 PHONE
medstarsouthernmaryland.org

Affirmation Statement

I hereby declare and affirm under the penalties of perjury that the facts stated in this application and its attachments are true and correct to the best of my knowledge, information and belief.

Sandra J. MacLeen
(signature)

SANDRA J. MACLEEN
(print name)

11/20/13
(date)

Affirmation Statement

I hereby declare and affirm under the penalties of perjury that the facts stated in this application and its attachments are true and correct to the best of my knowledge, information and belief.

Pegeen Townsend
(signature)

Pegeen Townsend
(print name)

11/20/13
(date)

Affirmation Statement

I hereby declare and affirm under the penalties of perjury that the facts stated in this application and its attachments are true and correct to the best of my knowledge, information and belief.

(signature)

PATRICIA G. S. CAMERON
(print name)

20 NOV 2013
(date)

Affirmation Statement

I hereby declare and affirm under the penalties of perjury that the facts stated in this application and its attachments are true and correct to the best of my knowledge, information and belief.

Jennifer Wilkerson
(signature)

Jennifer Wilkerson
(print name)

11-2013
(date)

Affirmation Statement

I hereby declare and affirm under the penalties of perjury that the facts stated in this application and its attachments are true and correct to the best of my knowledge, information and belief.

(signature)

Jonathan Hoffschneider
(print name)

11/20/13
(date)

Affirmation Statement

I hereby declare and affirm under the penalties of perjury that the facts stated in this application and its attachments are true and correct to the best of my knowledge, information and belief.

(signature)

TAMA DUFFY DAY

(print name)

NOV. 20, 2013

(date)

Affirmation Statement

I hereby declare and affirm under the penalties of perjury that the facts stated in this application and its attachments are true and correct to the best of my knowledge, information and belief.

(signature)

JAMIE HUFFCUT
(print name)

11.20.13
(date)

Affirmation Statement

I hereby declare and affirm under the penalties of perjury that the facts stated in this application and its attachments are true and correct to the best of my knowledge, information and belief.

(signature)

LATIANA ESCOBAR

(print name)

11.20.13

(date)

Affirmation Statement

I hereby declare and affirm under the penalties of perjury that the facts stated in this application and its attachments are true and correct to the best of my knowledge, information and belief.

(signature)

DEREK WARR

(print name)

11.20.13

(date)

Affirmation Statement

I hereby declare and affirm under the penalties of perjury that the facts stated in this application and its attachments are true and correct to the best of my knowledge, information and belief.

(signature)

DANIEL CAMP

(print name)

11/20/13

(date)

Affirmation Statement

I hereby declare and affirm under the penalties of perjury that the facts stated in this application and its attachments are true and correct to the best of my knowledge, information and belief.

(signature)

Raymond Tignall
(print name)

11/20/2013
(date)

Affirmation Statement

I hereby declare and affirm under the penalties of perjury that the facts stated in this application and its attachments are true and correct to the best of my knowledge, information and belief.

(signature)

GRANT OWEN
(print name)

11/21/13
(date)

## PART I – PROJECT IDENTIFICATION AND GENERAL INFORMATION

1. **Regarding Item 9, please provide the following clarifications and additional information and revise the table accordingly:**

   a. **The response reports a total current physical bed capacity of 331 including 24 sub-acute and 307 acute care beds. However, the MHCC Report on Selected Maryland Acute Care and Special Services, FY 2013, reported a total acute care physical bed capacity of 324 beds based on information provided by the hospital. Survey data for FY 2014 reported by the hospital indicates a total acute care physical bed capacity of 322 beds. Please reconcile the physical bed capacity numbers reported in this application with the physical bed capacity numbers reported on the MHCC surveys during the past two years. Please complete the attached bed inventory form. For information purposes, I have also attached abed inventory form from 2007 that shows a capacity of 350 beds established by MHCC and Southern Maryland Hospital Center staff as part of a prior CON review. Note the definition of physical capacity at the bottom of the spreadsheet.**

The bed inventory form is attached as Exhibit 1. The difference between the previously reported physical capacity on the MHCC's survey forms and the CON application question #9 is due to a few changes that have occurred in the way beds are designated for admission purposes in recent years. See response to questions 1b and 1c, below.

   b. **The response to Item 9 indicates a current capacity of 18 ICU/CCU beds and a proposed capacity of 24 such beds but an increase of eight (8) beds. However the sum of 18 and 8 is 26. What is the current ICU/CCU bed capacity? What is the proposed capacity? Note that the FY 2014 Acute General Hospital Licensed Bed Designation sheet indicates 12 licensed Medical Surgical Intensive Care beds and 12 licensed Medical Cardiac Critical Care beds. Also note that the 2007 inventory indicated a total CCU capacity of 30 beds in 24 rooms.**

Regarding Question 9, the current physical capacity of critical care is 18 beds. The proposed physical capacity is 24 beds. The 8 bed increase is a typographical error.

Regarding the bed designation form and the inventory of physical capacity, the physical capacity in the designated critical care units is, and has always been, 18. In prior years, the hospital designated as many as six monitored beds on a medical-surgical unit as overflow critical care rooms to account for the occasional over-capacity in the critical care units, and reflected this on the bed designation form, which does not require that licensed bed designation be strictly related to physical capacity. The attached inventory of physical capacity is correct as of this date.

c. **The response to Item 9 also indicates a current capacity of 27 obstetric beds and a proposed capacity of 30 beds, but the table reports zero in the change column. Please reconcile the current capacity, the change column and the proposed capacity. Note that the Hospital designated 30 OB beds for licensure for FY 2013 and FY 2014 on MHCC surveys. Note also that the results from the work in 2007 indicated that the OB capacity was 34 beds in 18 rooms.**

Over the past several years most of the medical-surgical and obstetrical units have undergone minor renovations. By example, in 2010 the original 30-bed (based on headwall count) post-partum unit was converted from semi-private to private rooms thus becoming a 16-bed unit. However, the renovation work did not remove a headwall in those patient rooms. Another space in the same bed tower was renovated to create a second all private 12-bed obstetrical unit with the 12 beds removed from the 1st floor unit, and each of the new rooms had only one headwall. Pursuant to discussions on this matter at the CON completeness review meeting, we understood the need to physically account for all existing headwalls. The total headwall count is reflected in the attached spreadsheet (Exhibit 1) displaying the actual physical capacity. However, as we do not intend to use the obstetric rooms on 1 South that still have two headwalls as semi-private rooms, the Question 9 response of 28 beds is accurate for practical purposes. In summary, there are 40 headwall units, serving 28 private OB beds.

d. **The "Total" row of the table reports a total current capacity of 331 beds including the 24 sub-acute beds and a proposed total of 337 beds, which would suggest an increase in capacity of 6 beds. However, the total number in the change column is zero. The "Proposed" column actually totals 340 beds suggesting an increase in capacity of 9 beds. Please reconcile these numbers.**

Below is the corrected response to Question #9.

**Question 9. Current Physical Capacity and Proposed Changes:**

| Service | Current Physical Beds | Beds to be Added or Reduced | Total Beds if Project is Approved |
|---|---|---|---|
| M/S/G/A | 252* | 0 | 252 |
| Pediatrics | 4* | 0 | 4 |
| Obstetrics | 28** | 0 | 28 |
| ICU/CCU Care | 18* | 6 | 24 |
| Psychiatry | 25 | 0 | 25 |
| Rehabilitation | 0 | 0 | 0 |
| Chronic | 0 | 0 | 0 |
| Other (Sub-Acute) | 24* | 0 | 24 |
| TOTAL BEDS | 351 | 6 | 357 |

* consistent with headwall count

** see response to 1c

2. **Regarding the response to Item 10, submit detailed time tables for receiving Special Exception Site Plan approval and Preliminary Plan of Subdivision approval including submission of applications, anticipated dates of public hearings and dates of expected action by granting authorities.**

**PROJECTED SCHEDULE FOR SPECIAL EXCEPTION AND PRELIMINARY PLAN OF SUBDIVISION APPROVALS FOR MEDSTAR SOUTHERN MARYLAND HOSPITAL EXPANSION**

**Special Exception Application**

1. Submission of application to M-NCPPC – 1/14
2. Acceptance of application by M-NCPPC – 2/14
3. Review of application by M-NCPPC Planning Staff – 3/14-7/14
4. Release of Technical Staff Report for the application by the M-NCPPC – 8/14
5. Application to appear on Planning Board agenda for possible request for a Planning Board hearing – 9/14
6. Planning Board hearing (if requested) – 10/14
7. Hearing before the Zoning Hearing Examiner – 11/14
8. Decision of the Zoning Hearing Examiner – 1/15

9. Appeal period in which a hearing before the Prince George's District Council may be requested – 2/15
10. District Council hearing (if appealed or requested by the District Council) – 4/15
11. Approval of District Council order approving the application – 5/15

**Preliminary Plan of Subdivision**

1. Submission of application to M-NCPPC – 1/15
2. Acceptance of application by M-NCPPC – 2/15
3. Review of application by M-NCPPC Planning Staff – 2/15-5/15
4. Release of Technical Staff Report – 5/15
5. Planning Board hearing – 6/15
6. Planning Board Resolution of Approval – 7/15

3. **Regarding Item 11, please provide the following clarifications and additional information:**

   a. **Given the response to Item 10 that obtaining approval of Special Exception Site Plan and Preliminary Plan of Subdivision could take approximately 15 to 18 months, explain how MSMHC will be able to obligate at least 51% of the approved capital expenditure within 12 months of CON approval.**

We expect CON approval in mid-2014, so the 12-month performance requirement for obligating 51% of the capital expenditure for the first phase of construction would fall in mid-2015. MSMHC will submit an application for Special Exception by January 2014, and expects to receive all necessary zoning approvals by mid-2015.

   b. **The response to Item 11 indicates that the project will be developed in phases over 48 months. Please identify the phases and the scope of each phase keeping in mind the performance requirements set forth in the MHCC regulations at COMAR 10.24.0.12. Will all phases be constructed under a single construction contract? If not, specify the number of construction contracts and identify the phase to be constructed under each contract.**

**PHASE 1: SOUTH ADDITION 48 weeks Mon 8/24/15 - Fri 7/22/16**
Construct South Addition Shell, Levels 00 and 01
Surgery Expansion fit-out
Surgery expansion first use
Cath Lab Expansion fit-out
Level 00 Non-plant Fit-out
Install Central Plant equipment

**PHASE 2: ED & VERTICAL EXPANSION 104 weeks Mon 5/2/16 - Fri 4/27/18**
ED south expansion shell
ED south expansion fit-out
ED expansion first use
Demo existing ED expansion
Construct Level 00 shell space
Demo existing ED
ED north expansion shell
Remaining ED fit-out
Reconfigure ambulance / helipad
Vertical shell
Vertical fit-out
Full ED first use
New ICU/CCU first use & Vacate existing ICU/CCU
Nursing Observation first use

**PHASE 3: INTERIOR RENOVATION 28 weeks Mon 3/5/18 - Fri 9/14/18**
Demo existing ICU/CCU
Demo existing Surgery
Miscellaneous demolition
New Pre / Post / PACU
Full Surgery Dept. first use
New Public Concourse
Remaining Interior Renovation
Construction Complete

We anticipate that each phase will be constructed under a separate construction contract.

4. **Regarding Item 14, Project Description, please provide the following clarifications and additional information:**

    a. **On page 11 it states that departmental square footage is well below national benchmarks. Submit national benchmarks for the departments affected by this project and identify the source of the benchmarks.**

Please refer to Exhibit 2 which compares existing and proposed department areas against benchmark areas for departments which are to be expanded or altered as part of the scope of this CON application.

Based on decades of design of healthcare projects across the nation, of a full range of size as well as specialty, Perkins+Will has developed best practice planning guidelines for

new facilities and has established target square footage ranges per department based on bed count and hospital type. Following is a brief summary of our benchmarking methodology as well as a list of facilities used for comparison:

1. Existing licensed bed count for the facility, assuming no growth.
2. Volume projections from MedStar.
3. Specific comparisons with community hospitals of similar size and setting, with a similar mix of specialties, from Perkins+Will's internal database.
4. Industry standards in healthcare planning were referenced (e.g. Facility Guidelines Institute, Veterans Administration, Military Healthcare, ACHE, The Advisory Board).
5. Projected surgery volumes were evaluated using Perkins+Will's proprietary "dashboard." The "dashboard" is a formula-based software program that allows the manipulation of key data points (e.g. number of procedure rooms, hours of operation, room target utilization and turnaround time) to determine, in real time, the effect on the other planning parameters. Perkins+Will conducted this benchmarking exercise with MSMHC to confirm the surgery program for the proposed project. These results, as well as interviews with the surgeons, nurses and staff, indicated that an additional quantity of Operating Rooms were not necessary. Rather, it was determined that the operational efficiency of surgery could be improved by right-sizing of the smaller ORs and their related support spaces for more flexibility of use as well as providing for technology upgrade of access to information, monitoring and communication.
6. Emergency Department volume projections from MedStar were considered, as well as seven additional volume project models by Perkins+Will's Emergency Department Specialist Team. These factors translated into the appropriate number of new treatment bays required. Please refer to the response to Question #16 below.

**b. Page 12 (1st paragraph), refers to a study of existing floor plan layouts, projected volumes and benchmark comparisons with similar hospitals. Please submit this study.**

The background for the proposed project is based on a facility Master Planning process which took place during the first half of 2013. Analysis of the existing facility, projected patient volumes, and specific benchmark comparisons to similar hospital facilities are explained in the application and in this document, however, the Master Plan is considered confidential.

**c. Regarding the Surgery Department, identify the size of the operating rooms that will be replaced.**

The operating rooms to be replaced are 446, 446, 430, 424, 495, and 360 net square feet, respectively.

**d. Describe the nature and extent of the rough grading that is estimated to cost $879,612 and the need for the pilings that are estimated to cost $3,584,100.**

The primary source of this cost is relocation and reconfiguration of the helipad and ambulance circulation court. These components currently occupy an area adjacent to a steep downward grade, and this area must be in-filled and re-graded in order to achieve the configuration shown in the proposed site plan. Rough grading will also be required to relocate and consolidate the two existing loading areas. This cost also includes allowances for dust control, erosion control, and other minor associated work.

Auger cast pilings were recommended by the project's structural engineer to support the vertical structure above the new Emergency Department (See Exhibit 3). The estimated cost for this work is based on the engineer's recommendation of 12"-diameter, 100-ton piles in this area.

**e. Describe the nature and the extent of the renovations by department.**

See the chart below for the description of the renovations by department.

## Departmental Project Description

| DEPARTMENT | DESCRIPTION |
|---|---|
| ADMINISTRATION | Reconfiguration of Admitting and associated spaces |
| BEHAVIORAL HEALTH | Not in scope |
| CARDIOLOGY | Not in scope |
| CCU | Complete relocation to new construction on Level 03 |
| DIETARY | Not in scope |
| EMERGENCY DEPARTMENT | Phased demolition and reconstruction of new, expanded ED |
| EVS | Various alterations associated with new construction and renovation scope |
| GENERAL MEDICAL | Not in scope |
| ICU | Complete relocation to new construction on Level 03 |
| LABOR & DELIVERY | Not in scope |
| LABORATORY | Not in scope |
| MATERNITY / NURSING | Not in scope |
| MEDICAL / PEDIATRICS | Not in scope |
| MEDICAL / RENAL DIALYSIS | Not in scope |
| NUCLEAR MEDICINE | Not in scope |
| OBSERVATION | New department in new construction on Level 04 |
| OUTPATIENT PHYCH | Not in scope |
| PHARMACY | Not in scope |
| PHYSICAL THERAPY | Not in scope |
| PLANT OPERATIONS | Expansion (new construction) to accommodate associated new construction and renovation scope |
| PUBLIC / SHARED CIRCULATION | General simplification and clarification. Additional area associated with new amenities and separation of public/private circulation |
| RADIOLOGY | Minor alterations in conjunction with adjacent Surgery and ED renovations |
| SLEEP LABORATORY | Not in scope |
| STERILE PROCESSING | Not in scope |
| SUPPLY | Not in scope |
| SURGERY | Replacement of six (6) existing operating rooms with larger rooms. Reconfiguration and expansion of Preparation / Recovery |
| VERTICAL CIRCULATION | Construction of new stair and elevator cores to serve new construction above Emergency Department |

5. **Regarding Item 15, Project Drawings, please provide drawings that more clearly show the departmental space to be added through new construction and the departments and other areas to be altered by renovations. Clearly identify the areas that will be shell space when the project is complete.**

Please see Exhibit 4. These are intended to supplement the drawings previously submitted rather than alter them.

6. **Regarding Chart 1, please identify the perimeter of the space that will be renovated in the basement.**

The perimeter of renovation is approximately 78 linear feet. This corresponds to a small area surrounding the new stair and elevator on the south side of the building.

## PART II – PROJECT BUDGET

7. **Please respond to the following:**

   a. **A reconciliation of the estimated site preparation cost of $7,313,002 on page 18 with the total cost reported on page 17 of $5,484,939.**

The $7,313,002 figure includes an allowance for landscaping, sidewalks, additional paving, and other site improvements as well as relocation of an existing storage structure. These items do not appear to be called for explicitly on Chart 1. The $7,313,002 figure also does not include pilings, which are called for on Chart 1. The cost of pilings is included in the "Building" line item on page 18.

   b. **An explanation of how the contingency estimate of $3,691,985 was calculated.**

This construction contingency was originally calculated as 5% of the construction cost of new construction, renovations, and site improvements. It was not updated to reflect minor final adjustments to these estimates, so now represents approximately 4.82% of this amount.

   c. **An explanation of how the interest cost estimate of $5,580,030 was calculated.**

The interest was estimated based on 6% interest on the debt over 30 years. Please note the revised project budget that reflects refinements made to the construction phasing and results in revised interest costs of $10,912,046 based on a four year construction period rather than the original estimated two years. See Exhibit 5.

**d. An explanation of how the inflation allowance of $9,729,969 was calculated.**

This allowance was originally calculated by Perkins+Will as 10% of project "core and shell" construction costs (the sum of the projected "Building—New Construction," "Site Preparation," "Building—Renovation", and "Contingency" estimates) plus 8% of all other costs. This figure assumes that the entire construction contingency estimate is used.

**e. An explanation of how the loan placement fee estimate of $1.1 million were calculated.**

Financing costs were estimated at 2% of the amount financed, allocated between placement fees, legal fees, consulting and printing. Approximately 1.25% was allocated to placement fees.

**PART III – CONSISTENCY WITH GENERAL REVIEW CRITERIA AT COMAR 10.24.01.08G(3)**
**Response to State Health Plan for Facilities and Services: Acute Care Hospital Services, COMAR 10.24.10**

**8. Regarding COMAR 10.24.10.04(A)(1), the submitted policy lacks specific procedures for promptly responding to individual requests for charge information for specific services/procedures as required by the standard. Please revise and resubmit the policy accordingly.**

MSMHC has updated the policy entitled, "*Average Estimated Charges*," regarding the provision of information on common inpatient and outpatient hospital charges. Please refer to Exhibit 6 for revised policy. A list of services and charges are posted on the hospital's website, which can be accessed through the following link: https://www.medstarhealth.org/southern-maryland/Pages/About-Us/Estimated-Average-Charges-for-Common-Procedures.aspx

Procedure:

1. A list of common inpatient and outpatient procedures and charges are maintained on the hospital's website (www.medstarsourthernmaryland.org)
2. This information is reviewed and updated quarterly and is based on the average charges for the prior twelve months.
3. Patients with questions about this information are also directed to contact the hospital's business office at (301) 877-4262 during normal business hours (8:00AM to 4:30PM).

a. A trained business office representative will facilitate response to the patient's inquiry. The Director of Patient Accounts is also available should the representative need further guidance in assisting the caller.

b. Information requested will be responded to within 24-hours of contact. The intent is to respond immediately, but by no later than the end of the next business day.

c. A current list is available in writing upon request and can be sent as an attachment to an e-mail.

**9. Regarding COMAR 10.24.10.04(A)(2)(a)(ii), please provide the following additional information and documentation:**

**a. The policy at Attachment 3 provides for probable eligibility determination within two business days only upon receipt of all requested and necessary documentation. Specify the requested and necessary documentation that is required for a determination of probable eligibility. Explain how this is consistent with the purpose of this standard which is to give a potential patient seeking charity care an idea fairly quickly as to whether the patient will be able to obtain services. The standard's required two-day turnaround for a determination of probable eligibility permits a patient to know their likely eligibility for charity care, if the underlying required documentation bears out what the patient represented in a request for charity care or an application for medical assistance. It can take a patient days or weeks to get all the required documentation needed for a complete application. This standard requires a determination of probable eligibility; a final determination of eligibility can be made after the application is complete and has required supporting documentation.**

The financial assistance policy has been revised to address this concern. See Exhibit 7 for the addendum to the policy.

**b. MedStar Health's financial assistance program exclusions include insured patients who may be underinsured (e.g., a patient with high deductible/coinsurance). How is it determined who is underinsured?**

The financial assistance policy has been revised to address this concern. See Exhibit 7 for the addendum to the policy.

**c. The policy does not address the requirement that public notice of information regarding the hospital's charity care shall be distributed through methods designed to best reach the target population and in a format understandable by the target population. Please revise the policy accordingly addressing how notice will be distributed and submit copies of**

**the public notice in the languages understandable by significant segments of the target population. The notices should include clear instructions to the public on how to apply for charity care.**

The financial assistance policy has been revised to address this concern. See Exhibit 7 for the addendum to the policy.

See Exhibit 8 for a copy of the most recent notice published in June, 2013, in English and in Spanish, in the Enquirer Gazette, a local paper serving Prince George's and Montgomery County.

d. **Submit copies of the notices posted in each major registration area. Specify where in MSMHC such notices are posted.**

The notice shown in Exhibit 9 is posted in the Admissions area and the Emergency Department.

e. **Submit a copy of Maryland Patient Information/MedStar's Patient Information Sheet that is provided to inpatients on admission and at the time of final account billing. How is such information provided to each patient who seeks outpatient services?**

See Exhibit 10. This document is given to all inpatients and a copy is included in the Patient Information Guide, and is also provided to patients in our outpatient services areas as well as our Emergency Department.

10. **Regarding COMAR 10.24.10.04(A)(3)(a), Quality of Care, please provide a copy of the deficiency(ies) cited by the Office of Licensing and Certification Programs and the applicant's plan of correction, and provide a timeline on when you expect to receive a final resolution of this matter.**

Since the application was filed, we have received notice from CMS that the hospital is in full compliance with all the Medicare Conditions of Participation, based on the results of the survey conducted by the Office of Health Care Quality on October 8, 2013. Therefore, the hospital is now consistent with review standard .04A(3)(a). That notice was mailed to you on November 14, 2013, and is attached for reference as Exhibit 11.

11. **Regarding COMAR 10.24.10.04(A)(3)(b), concerning the actions taken to improve the performance for the three Quality Measures that fell below the 90% level and in the bottom quartile for all hospitals, please discuss the**

**progress made in terms of staff compliance and improved performance for blood tests for Pneumonia, Influenza Immunizations, and preparing a home management plan of care for Children with Asthma.**

## *Quality Measure Action Plans*

| **Quality of Care for Pneumonia** | | | | |
|---|---|---|---|---|
| Performing the recommended blood test | 44 | 44 | 88% | 95% |
| **Quality of Care for Children's Asthma** | | | | |
| Children and their caregivers who received a home management plan of care document | 19 | 19 | 58% | 86% |
| **Quality of Care for Immunizations** | | | | |
| Pneumococcal Immunization | 45 | 32 | 88% | 85% |
| Influenza Immunization | 45 | 38 | 85% | 86% |

**Pneumonia**

We are currently at 100% compliance on this measure. Steps taken to improve performance on the measure 'Performing the recommended blood test for pneumonia' include:

- Educated Emergency Room Physicians and Nurses on need for blood test **prior** to antibiotic administration.
- Medication dispenser (Pyxis) has an alert to the nurses reminding them to obtain blood culture prior to administering antibiotic.
- Department feedback provided to individuals that fail to obtain blood culture prior to antibiotic.
- Monthly update to department manager regarding core measure pneumonia compliance.
- Core Measure compliance rates provided to Emergency Department Medical Director, Vice President of Medical Affairs, and Chief Nursing Officer.
- Educated Emergency Department staff to document correct time of blood culture and not the time sent to the lab.

**Asthma**

Children and their caregivers who received a home management plan of care document

for asthma:

- Developed and educated physicians on the Childhood Asthma Discharge Form.
- Educated nursing staff to document asthma patient education on the plan of care.
- Nurse Director of the Pediatric Unit receives a daily report to follow pediatric asthma patients and ensure proper documentation for plan of care.

**Immunizations**

Pneumonia/Influenza immunization:

- Nurse's screen all patients upon initial admission to the nursing unit.
- If immunizations are needed, an order is placed on the patient chart to go to pharmacy.
- Nurse administers the necessary immunization and records in on the medication record.
- Unit secretaries provide oversight of the immunization need and inform nurse to address.
- Chief Nursing Officer and Vice President of Medical Affairs receive monthly core measure reports.
- NEW- Horizon HEV program monitors on nursing unit alert nursing staff of immunization needs on each patient.
- Daily report from IT to all nursing departments and Quality office to follow up on missed immunizations.

***Compliance Data as of 10/28/2013***

| **Quality of Care for Pneumonia** |
|---|
| Performing the recommended blood test<br>**100%** |
| **Quality of Care for Children's Asthma** |
| Children and their caregivers who received a home management plan of care document<br>**No Patients for 2 months** |
| **Quality of Care for Immunizations** |
| Pneumococcal Immunization<br>**92 % Compliance** |
| Influenza Immunization<br>**Influenza Vaccines begin 10/1/13** |

12. **Regarding the response to COMAR 10.24.10.04(B)(5), Cost-Effectiveness, on page 27 (2nd paragraph) of the response it states that after extensive review and analysis Option 1 was identified as the most cost effective option. With respect to this review and analysis and the response to this standard in general, please provide the following additional information and clarification:**

    a. **Provide a detailed description of this extensive review and analysis.**

Perkins+Will met regularly with MedStar Southern Maryland Hospital Center stakeholders during an intensive, four-month master planning process beginning in April of 2013. This process began with a series of user meetings and an analysis of existing facilities, followed by a benchmarking exercise intended to identify and prioritize departments that were undersized or in need of operational improvements. In parallel with this, an intensive, on-site analysis and evaluation of the Emergency Department was conducted by specialized Perkins+Will staff. See Exhibit 12.

The data gleaned from this investigative phase was used to develop three master plan options, as described in our original application document. These options—all of which addressed goals identified in the investigative phase to varying degrees—were presented and discussed at a meeting on July 25, 2013. These options varied widely in scope and timeframe, and it was agreed that a preliminary decision could be made based on qualitative criteria without the need to expend resources to distinguish the options quantitatively. It was determined at this meeting that Option 1 was the most promising of the three presented, but that further refinement and variations on the general approach of that scheme were necessary. This refinement occurred during the period between this meeting and submittal of the CON application in early October as described in the initial application document.

    b. **Did the review and analysis quantify the level of effectiveness of each alternative in achieving each alternative including the three variations of Option 1? If yes, submit the quantification of each alternative except Option 0, the do nothing/refurbish alternative.**

The variations on Option 1 were evaluated primarily on a qualitative basis in an iterative process involving a wide range of stakeholders including executives, users, and consultants. This process involved a series of refinements to each variation in response to feedback from these stakeholders, and the variations were evaluated primarily with regard to how well they satisfied the goals and priorities identified during the master planning stage. Since these goals were largely qualitative in nature, an evaluation strategy involving quantitative criteria was judged to be unnecessary.

Although the evaluation of these design variations was primarily qualitative in nature, some quantitative criteria were incorporated into the decision process. Departmental areas and bed counts were calculated and monitored in real time throughout the design process, and were repeatedly compared to the benchmarks established during the master planning process. In addition, cost estimates were prepared for each of the three variations midway through the design process in order to evaluate the cost effectiveness of each option and adjust the design accordingly (See Exhibit 13).

c. **The standard also requires the hospital to develop capital estimates and projections for each alternative. While the application includes the estimated capital cost for each variation of Option C, no capital cost estimates were presented for Options 2 and 3. Submit capital cost estimates for Options 2 and 3 comparable to the capital cost estimate for Option 1C.**

Options 1, 2, and 3 were developed as part of the master planning process in order to study alternate strategies for satisfying the project goals. These options varied widely in ambition, scope, and timeframe, and were developed, proposed, and selected among prior to design refinement for the purposes of a Certificate of Need application. As such, it did not seem necessary to devote time or resources to developing accurate and detailed cost estimates for very preliminary design solutions. Since the options varied so greatly in scope, it was possible to consider cost on a qualitative, order-of-magnitude basis for the purpose of making early decisions regarding design approach.

d. **The capital cost estimate for Option 1C of $77.7 million does not appear to be consistent with the cost estimate for the proposed project which is $78.6 million for new construction and $17.9 million for renovations, both amounts excluding movable equipment, contingencies, interest during construction, inflation and financing fees. Please explain or revise accordingly and insure that the estimates for Option 1A and B and Options 2 and 3 are consistent in terms of project components and time frame .**

The $77.7 million figure was a preliminary estimate reflecting only site work and "core and shell" costs. This cost estimate was developed primarily for comparative purposes, and it was understood at that time that a more accurate cost estimate would be developed later in the design process once more information was available.

e. **The standard also requires the applicant to develop operational cost estimates for each alternative, please submit such estimates for each alternative.**

The options were not developed far enough to devote resources to operational cost estimates. We can, however, estimate generally that there would not be significant

differences between the operational costs of the options. The alternatives instead differed on how well they met the hospital's objectives.

13. **Regarding the response to COMAR 10.24.10.04(B)(7), Construction Cost of Hospital Space, as presented in Attachment 5, please provide the following clarifications with respect to the cost adjustments**

    a. **Do the calculations of the MVS benchmark for new construction and renovations include the expansion and renovation of the surgery department? If no, please submit alternative calculations of the MVS benchmark for new construction and for renovations including the work proposed for the surgery department. Note that the State Health Plan Chapter for General Surgical Services provides that a hospital is not required to address standards in the chapter that are completely addressed in its response to the standards in COMAR 10.24.10. MHCC Staff believes that the application of the Construction Cost of Hospital Space standard from that chapter to projects that make physical plant changes to Surgery Departments as well as other departments is likely to be more appropriate than applying the Construction cost standard from the General Surgical Services chapter separately.**

The MVS benchmark calculations for both "new construction" and "renovation", in Attachment 5 of the application, includes the Surgery Department. As requested, a third, separate, MVS benchmark analysis for the Surgery Department was also provided. Those analyses are provided here as Exhibit 14.

    b. **Explain the reason for the two columns under the cost adjustment section of the calculation of the benchmark for both new construction and renovations and for the surgery department.**

The left hand column represents the net construction cost of each cost adjustment. (These net costs are included within the base building costs from lines 1a and 1c).

The center column shows the respective portion of Capitalized Construction Interest (from line 1f) applicable to each cost adjustment.

The right hand column is the total cost adjustment made for each line item.

    c. **Explain why there are adjustments for phasing/temporary work under both new construction and renovation and for surgery department and how each was calculated.**

The costs for phasing and temporary works are project/site specific, and could not

reasonably be anticipated to be included within the standard MVS benchmark costs.

The value for phasing and temporary works is an allowance based on 5.0% of the net construction cost. (This cost is included within the base building costs from lines 1a and 1c).

**d. Explain the escalation on each page and how it was calculated. Is this escalation related to the project budget estimate for inflation on page 18?**

Escalation appears to be specifically excluded from the MVS benchmark costs stated as, "anticipated labor and material increases" under Section 1, page 3.

The value for escalation is an allowance based on a cost increase of approx. 1.0 – 1.25% per quarter. Assuming a mid-point of construction of Q2 2017, this equates to approximately 15.0% increase on the gross construction cost. (This cost is included within the base building costs from lines 1a and/or 1c).

**e. Explain the need for the piled foundation system and how the cost adjustment for this item was calculated for the new construction.**

Piled foundation systems appear to be specifically excluded from the MVS benchmark costs stated as, "pilings" under Section 1, page 3.

A deep piled foundation system has been included in the RLB cost estimate, as per the structural narrative dated 16th September 2013 (Exhibit 3). The value is based on built-up quantities and unit rates within the cost estimate. (Piling costs are included within the base building costs from lines 1a and/or 1c.)

**f. Describe the major earthworks and explain the need and how the cost adjustment was calculated. Differentiate this line item adjustment from the adjustment for site earthworks (demolition, rough grading).**

The value for 'major earthworks' is based on costs within the cost estimate, using built-up quantities and unit rates. It is intended to cover bulk cut and fill costs.

MVS Section 1, page 3, states that the benchmark costs include for, "normal site preparation including finish, grading and excavation for foundation and backfill for the structure only." Major excavation and imported site fill is project/site specific and could not reasonably be anticipated to be included within the standard MVS benchmark costs.

The value for 'site earthworks' is based on costs within the cost estimate, using built-up

quantities and unit rates. It is intended to include costs for demolition, site clearing, and rough grading.

Site demolition and rough grading is also excluded in the MVS under Section 1, page 3.

The values for 'major' and 'site' earthworks are included within the base building costs from lines 1a and/or 1c.

**g. Explain the need for the underpinning listed under renovations and explain how the cost adjustment for this item was calculated for the renovations.**

Underpinning of the existing foundation will likely be needed in the vicinity of the new elevator core (Elevators 10 and 11) to avoid structural damage during construction of the elevator pit. This requirement is noted on page 3 of the structural narrative (Exhibit 3).

Underpinning is project/site specific, and could not reasonably be anticipated to be included within the standard MVS benchmark costs.

The value for underpinning is an allowance from the cost estimate, based on the structural narrative dated 16th September 2013 (Exhibit 3). This cost is included in the base building costs from lines 1a and/or 1c.

**h. Regarding the site utilities demolition and relocation, describe the work that will be done and how this adjustment was calculated differentiating the demolition from the relocation. Justify the reasonableness of taking an adjustment for the cost of the relocation given that the calculator cost section of the Marshall Valuation Service includes utilities from the structure to the lot line in the hospital base cost ($336.71 per sq. ft.).**

The value for site utilities demolition and relocations are based on costs within the cost estimate and is to include the removal/relocation of existing site lighting, transformers, generators, propane and oxygen tanks, re-working of existing site storm drainage, and new site lighting.

It is noted that the MVS specifically mentions the inclusion of, "utilities from structure to lot line..." This would suggest the inclusion for the cost of new utilities connections to the proposed building. It is deemed that demolition and relocation of existing site utilities are project/site specific and could not reasonably be anticipated to be included within the standard MVS benchmark costs

In addition, the MVS also specifically excludes demolition, storm drains, septic systems,

and yard lighting, under Section 1, page 3.

i. **What are the markups in the adjustment for each component and explain how it is calculated.**

The markups and adjustments value is based on costs within the cost estimate, and applies to each of the cost adjustment line items (excluding lines 2a and 2b). The value is based on the following:

| | |
|---|---|
| General Conditions | @ 9.0% |
| Bonds and Insurances | @ 3.0% |
| Overhead and Profit | @ 4.5% |
| Design / Estimating Contingency | @ 15.0% |

14. **Regarding COMAR 10.24.10.04(B)(9), Inpatient Nursing Unit Space, please provide documents that support your position that higher intensity of patient care requires more space in patient rooms for equipment and staff, and that 659 square feet per critical care bed complies with the space standards used by architects and industry experts.**

Critical Care rooms must follow specific Federal Guidelines requirements for the length of the headwall (13 ft) as well as the clearance around the bed. In addition, patients must be able to access a toilet without entering a public corridor. The configuration of the unit is such that all rooms are accessed from a corridor, therefore, every room is equipped with a patient toilet. The patient room square footage is also driven by current best practices: a family area adjacent to the patient care area is typical of critical care room design. The combination of these factors contribute to the actual room size of 372 square feet.

Federal Guidelines also mandate specific requirements for support space in critical care units: as an example 20 square feet per bed is required for storage as a minimum. Staff stations require good visibility to the critical care rooms, as well as easily accessible support spaces such as medication rooms and lean storage. Space for a staff lounge and a required family waiting area also contribute to the overall square footage. Based on the Perkins+Will database of critical care rooms, the 659 proposed for MSMHC is on the lower end of the spectrum for this room type.

15. **Regarding COMAR 10.24.10.04(B)(11), Efficiency, please provide a copy of the sections of the master plan discussed on p. 30-31 of your application that address the inefficiencies in the existing hospital and how the project will improve operational efficiencies for the Emergency Department, Surgery**

**Department, Critical Care Unit, Cardiovascular Services, Observation Unit, and the Main Entrance Plaza. If not addressed by the master plan, please provide (a) an analysis of each change in operational efficiency projected for each treatment service, and document the manner in which the planning and design of the project took efficiency improvements into account; and demonstrate how the proposed project will improve operational efficiency when the expanded treatment service experiences an increase in the volume of services delivered, or why improvements in operational efficiency cannot be achieved.**

The proposed project will improve operational efficiencies over the existing conditions in specific ways within the Emergency Department, Surgery, Critical Care Unit, Cardiovascular Services, Observation Unit and the Main Entrance Plaza.

1) Proposed changes in operational efficiency for each treatment service listed above are as follows:
    a. Improve patient flow at the ambulance and walk-in entrances through registration and triage to the treatment rooms
    b. Providing better visual access and establishing zones for safety and security
    c. Providing adequate work areas in optimal locations for staff and physicians
    d. Ensure that key exam and treatment rooms are large enough
    e. Allow for ease of flow among primary department zones
    f. Provide adequate storage of supplies and equipment near the point of use
    g. Plan and provide for primary and secondary flow of patients through the treatment areas
    h. Create a distinct and clear zone and path for the behavioral health patients.

2) Document the manner in which the planning and design of the project took efficiency improvements into account:

Observations of the existing facility and its operational practices were made by the Perkins+Will team and interviews with the key department Staff and Physicians were conducted. The proposed department plan layouts were reviewed in detail with this group through several iterations. Existing issues, challenges and recommendations were discussed and addressed by the proposed program and developing floor plans.

3) Demonstrate how the proposed project will improve operational efficiency when the expanded treatment service experiences an increase in the volume of services delivered:

Key departments are to be upgraded and expanded to accommodate projected increases in both volume and technology. As such growth is projected for each of the referenced departments, the projected project proposes floor plan layouts, unique to

each department, and specific to the operational challenges that currently existing and/or are anticipated due to the anticipated growth. Since the original organizing principles of all the existing departments have been modified incrementally throughout the years, what remains does not allow for efficient flow of patients, staff, physicians and equipment/supplies. The proposed layouts realign both primary and secondary circulation, proposes locations for the additional space required and reestablishes an order to the department that will support the operational improvements that will be implemented by the staff.

**16. Regarding COMAR 10.24.10.04(b)(12), please provide the following:**

**a. The manner in which the proposed project incorporates patient safety in the changes and design to: the Emergency Department; Surgery Department; Critical Care Services; Cardiovascular Services; Observation Unit; and the Main Entrance Plaza. Include how each of the bulleted items on pages 31-32 are implemented and address how each improves patient safety for each of these patient services.**

The proposed project shall provide MSMHC with an opportunity to address patient safety issues through renovation and new construction in the key departments listed above. By so doing, they will create the "superior environment of care" that is a part of their facility vision and their commitment as a member of the Healthier Hospitals Initiative. The original CON application listed a number of overarching as well as department-specific steps that will be implemented in the project design and construction. These strategies are listed below, but descriptions have been added to further define the intended effect they will have on patient safety, as follows.

Overarching strategies include the following:

- Using the most recent design guidelines, building and life safety codes ensures that the design reflects the most current thinking and knowledge of the industry.
- Creation of defined pathways and improved access to services reduces the distances patient, families and caregivers need to travel to get to where they need to go. Further, since it is easier for the building occupants to find what they need, their level of anxiety – which is already likely to be elevated – is not raised unpredictably.
- If the hospital's culture and environment are built around the immediacy of care, then there is a known framework upon which decisions affecting facility operations and physical space can be made.
- Areas for staff-patient information exchange which meet the most recent HIPAA guidelines allow for improved levels of concentration by the staff and a more private, dignified experience for the patient, lowering their level of

anxiety.

- An information infrastructure that enables the best possible coordination among care providers ensures that the caregivers have access to the patient's most important medical information when they need it and the time the patient spends in the hospital is as efficiently coordinated as possible.
- Standardization of the fundamentals of the design (space, layout, location, equipment and supplies) creates familiarity with the patient, consistency with the staff and efficiency maintaining the facility.
- Dedicated staff support areas as well as areas of respite allow the caregivers a chance to step away – but not too far – to recharge their mental and physical batteries. The benefits of this is a well-known and tested evidence-based strategy.
- A clear plan for future expansion and flexible space which anticipates changes in technology will minimize the disruption caused during future renovation or expansion of the space.
- Right-sizing key spaces within the critical clinical service departments referenced above, to support contemporary practice for both existing and anticipated community need allows MSMHC to improve their operations as well as their diagnostic and therapeutic technology. Supporting the best possible clinical practice recognizes that patient care is constantly evolving and that patients will benefit from the improvements.
- Reduce, and eliminate where possible, the fragmentation of the existing department areas that are the result of years of minor and incremental adjustment and modifications outside of an overarching master plan. The floor plans provided in this application indicate the strategies that are planned to re-establish appropriate departmental adjacencies. To determine these, the existing flow of patients, clinicians, staff, and supplies was observed and steps were taken to address problems, thereby promoting greater efficiency and safety in the delivery of patient care.
- Standardization of the critical care rooms will promote greater patient safety by increasing staff familiarity with the environment and facilitating greater observation of the patient.
- Providing both shared and dedicated space for the family in the critical care and observation rooms allow increased involvement in the care of the patient by their family.
- Fostering of better staff collaboration and communication is aided by design of the workstations, including providing adequate work area for nurses and physicians with good visibility of the patient in their rooms as well as adequate storage, balanced with acoustic and visual separation from the rest of the unit in key areas of the central nursing area.

- The careful, planned integration of technology into the design makes these tools available to the caregiver when needed, but are out of the way when they aren't.
- Design and planning for scalability and flexibility with a long-term strategy in mind recognizes the constant change of patient types, their health issues and the method of caring for them.

**b. Provide information on the EMR system incorporated with this project. Provide the name of the software system, how physicians and staff will utilize this system, such as computerized physician order entry, electronic medication administration records, barcode medication administration, electronic data exchange with providers, etc. Will providers at MSMHC have the ability to exchange data on the HIE?**

The McKesson Horizon Clinicals system was implemented on 01/15/13 in the ED and on 02/18/13 for the remainder of the hospital. All the hospital's providers are online. This system covers clinical documentation and computerized physician order entry (CPOE). All notes and orders are electronic. All medication orders are entered through the EMR, and the nursing medication administration schedule is also in the EMR. The system includes electronic medication administration records (eMar) using bar coding technology to submit and fill prescriptions: medications are scanned, along with patient identification, to confirm accuracy before medication is administered. We have established an interface with the HIE, and providers have the ability to exchange data via the HIE.

**c. How right sizing the clinical services will "support the best possible clinical practice" as discussed in paragraph one on page 32.**

Current facility conditions at the diagnostic and treatment block have not been significantly enhanced or renovated since the original construction in the 1970's. Therefore, the facility does not meet current space standards for clearances around patient treatment spaces or staff support spaces within departments. The existing footprint in treatment areas, specifically, limits staff mobility within rooms and around patients as well as precludes introduction of modern equipment. Limited staff working space and limited off-stage areas can contribute to staff fatigue and the potential threat of medical errors. Renovations to improve access to patients within treatment rooms will allow staff to follow current operational models supporting improved patient safety. Providing space for new technology will allow opportunity for new procedures that may be related to improved patient outcomes.

**d. Which departments have been fragmented and dissociated within the facility, and how the project will create "optimal flow of patients, clinicians, staff, and supplies."**

Response: The current facility configuration is based on departmental adjacencies of acute care in the 1970's. New treatment spaces within departments were needed, without the ability to add within departments which were landlocked on the main floor, specifically, Cardiology and the Emergency Department. Therefore, departmental functions were placed outside the diagnostic and treatment block within hospital additions, requiring clinical staff and patients to travel outside the department, along public corridors for treatment. This extended travel outside of a department does not support patient-centered care leading to patient dissatisfaction and discomfort. Additionally, long travel distances for staff can lead to extended process time and resource inefficiency. Suggested planning involves reorganizing and reconsolidating treatment spaces per department. Reconsolidating treatment spaces and support spaces into their respective departments limits patient travel for treatment, reduces staff travel, and increases staff time within their department focused on patient care.

e. **Provide details and identify the problems associated with the dissimilarity of critical care rooms. How will the project address each of the bulleted items listed on page 32?**

*Support family involvement in the care of the patient by providing both shared and dedicated space:* as noted in question 14 above, the critical care room provides enough space for a distinct family zone adjacent to the patient care area, and will allow for staff to care for the patient without the family being in the way, but remaining close by. There is a general family waiting area on the floor of the unit which is an FGI requirement. A consultation room is also provided for staff to communicate with family members in a private setting.

*Dedicated work stations to foster better staff collaboration and communication:* In addition to the larger centralized staff stations throughout the unit, there are touch-down stations outside each critical care room. This allows staff to concentrate on patient care when appropriate, and at the same time provide the collaborative and support space necessary for overall care. Staff stations are designed with good visibility to a block of rooms and staff can access the station from both corridors. The intent is for portions of the unit to be opened or closed as the census requires, without compromising easily accessible support space.

*Establish immediate accessibility of information supplies and material in close proximity to the patient:* touchdown stations allow nursing staff to have immediate access to information, as well as the caregiver to remain in close proximity to the patient. As noted above, the staff stations spaced throughout the unit each have access to required support space such as clean linen and medication.

*Improve visibility of patient to staff and staff to patient:* the larger patient room size allow staff to remain while caring for the patient. The number of staff stations / support nodes also means that staff does not need to go far from the patient while administering care.

*Locate staff work areas to provide visibility to patients, and accessibility for patients to care provider:* this ties into the improved visibility point above, as well as to comments noted in regard to dedicated work stations. In addition to staff having better access to the patient, the number of collaborative and individual staff work areas, size of the patient room, and dispersed support areas also mean that patient have better access to staff.

**f. For the Surgery Department, identify the integrated technology that will be used as a tool to aid the caregiver. What design changes and plans in the proposed project will promote scalability and flexibility? What are the long term strategies in the master plan for the Surgery Department?**

Response: The areas of most change for the new Surgical Department layout are the size of the operating rooms and the availability of support space for the department. Within the right-sized operating rooms, new technology can be accounted for while meeting required clearances around the patient. Additionally, much needed storage space will support the growth of surgical practices which require considerable quantities of storage, such as orthopedic surgery. The new Surgery Department layout treats operating rooms as a module that includes the patient treatment space and support areas necessary for higher acuity surgical scenarios such as orthopedic, vascular and neurosurgery. The module as drawn can continue to be replicated towards the south side of the existing diagnostic and treatment block, if in the future, the facility necessitates further expansion of the Surgical Department with additional operating rooms. Additionally, the prep-op and recovery area is designed to accommodate patient volume fluctuations at different times of day. Pre-op bays are sized and designed to function as recovery bays for evening hours, while recovery and PACU bays are sized and designed to function as pre-op bays during morning influx of patients. Staff are able to pass easily throughout the entire pre-op and recovery area allowing for flexible staffing.

Design changes/plans that promote scalability and flexibility include the pre-operative phase for prep and phase 2 recovery. The workload and type will flex with volumes, time of day and the need. These rooms will be multipurpose ensuring high utilization. Some examples include preoperative prep, patient exams, interviews and consults by specialty practitioners, line placement (central, arterial, Swan, etc.), anesthesia regional block placement prior to procedure, respiratory treatments, post-op patient exams by

private surgeons, patient education (pre-operative, intra-operative, post-op/discharge, meds, interpreting services, financial/admitting, case management for home needs, etc.). The space will allow the patient to have family or significant others with them for support up until the time of surgery, supporting the psychosocial and cultural needs of the patient. The new design will also promote a significantly improved workflow allowing us to combine nursing staff and consolidate responsibilities and functions. The new design also incorporates a comprehensive GI Endoscopy space with procedure rooms large enough to incorporate the latest necessary diagnostic equipment. For efficiency purposes, the GI Endoscopy space also includes space for patient prep and recovery separate from the general surgical population. The area will allow privacy for our patients and gastroenterologists and pulmonologists, similar to that of a modern ASC.

Integrated technology will include a fully integrated EMR for nursing, anesthesia, and surgical components that flow over to the med/surg EMR. Multiple status boards will be available to the surgeons, anesthesia and nursing departments. The information will also be available for family viewing in the dedicated surgical waiting space. In this way, family members will have a constant update on the patients' progress and location. Post operative room assignments will be available on those patients being admitted. The status boards will improve efficiency throughout the system since all associates will have a real time visual on patient progress and needs. With the construction of six replacement ORs and renovation of four existing ORs, comes the opportunity to improve communication and operational coordination through enhanced technology. High definition cameras, strategically placed, will allow the OR control desk to assess progress of each individual room and proactively plan for upcoming scheduled and emergent procedures with little interruption to surgical teams. High definition cameras could also improve efficiency by being utilized for remote consults when a physician is not physically available (off site or in another OR scrubbed) as well as telemedicine conferencing. Installation of boom arms for biomedical equipment will greatly improve ergonomics, staff safety and decrease room turnaround time. There is also an added benefit of decreased general storage space if rooms are equipped with all daily use biomedical equipment on boom arms.

Long term strategies will include further development of existing services (general, orthopedics, neurosurgical, vascular, urology, gynecology, etc.) and addition of new services (robotics, oncology, breast health, colorectal, etc.) Additional opportunities involving academics and research would require a modern facility with state of the art equipment and infrastructure.

17. **COMAR 10.24.10.04(B)(13), Financial Feasibility, requires each applicant to demonstrate that utilization projections are consistent with observed historic trends. Please respond as required.**

The historical utilization numbers shown in the chart below have been influenced by changes in physicians and services, the recent jump in observation status, and in FY 2013, the conversion of calendar year to fiscal year accounting. The chart shows that the average historical growth rates are not inconsistent with the projected average growth rates.

**Actual and Projected Admissions and Patient Days**

| | Year | Admissions | Percent Change | Pt.Days | Percent Change |
|---|---|---|---|---|---|
| Actual | FY 2007 | 19,489 | | 72,487 | |
| | FY2008 | 19,466 | -0.12% | 71,269 | -1.68% |
| | FY2009 | 19,089 | -1.94% | 68,341 | -4.11% |
| | FY2010 | 18,522 | -2.97% | 65,415 | -4.28% |
| | FY2011 | 18,731 | 1.13% | 67,102 | 2.58% |
| | FY2012 | 18,417 | -1.68% | 67,679 | 0.86% |
| | FY2013 | 16,534 | -10.22% | 62,179 | -8.13% |
| Projected | FY2014 | 16,706 | 1.04% | 63,270 | 1.75% |
| | FY2015 | 17,028 | 1.93% | 64,053 | 1.24% |
| | FY2016 | 17,332 | 1.79% | 65,163 | 1.73% |
| | FY2017 | 17,415 | 0.48% | 65,473 | 0.48% |
| | FY2018 | 17,499 | 0.48% | 65,798 | 0.50% |
| | FY2019 | 19,540 | 11.66% | 73,646 | 11.93% |
| | FY2020 | 19,636 | 0.49% | 73,999 | 0.48% |

Includes newborn admissions, excludes subacute admissions

Recorded observation stays in FY 2012 = 2,918 and in FY 2013 = 4,621

18. **Regarding COMAR 10.24.10.04(B)(14), please provide the following information:**

    a. **The number of uninsured, underinsured, indigent, and otherwise underserved patients residing in MSMHC's primary service area and the impact these groups have on emergency department utilization.**

As part of the ongoing development of our population health management strategy, MedStar engaged a consultant to help assess the projected impact of health reform on insurance coverage in the region. The following table illustrates the projected volume by percentage of Federal Poverty Level (FPL) and insurance type for MSMHC's primary

service area for FY 2012-2019:

| Insurance | Federal Poverty Level | 2012 | 2013 | 2014 | 2015 | 2016 | 2017 | 2018 | 2019 | Increase/ Decrease |
|---|---|---|---|---|---|---|---|---|---|---|
| Commercial | <200% FPL | 13,500 | 13,531 | 13,398 | 13,431 | 13,379 | 13,352 | 13,443 | 13,589 | 1% |
| Commercial | >400% FPL | 111,770 | 112,884 | 116,437 | 117,699 | 118,888 | 120,083 | 121,299 | 122,452 | 10% |
| Commercial | 200%-400% FPL | 38,308 | 38,576 | 40,422 | 40,808 | 41,060 | 41,368 | 41,800 | 42,264 | 10% |
| | **Subtotal Commercial** | **163,578** | **164,991** | **170,257** | **171,938** | **173,327** | **174,803** | **176,542** | **178,305** | **9%** |
| Exchange | <200% FPL | - | - | 2,421 | 2,647 | 2,850 | 2,897 | 2,954 | 2,995 | 24% |
| Exchange | >400% FPL | - | - | 4,361 | 4,202 | 4,220 | 4,219 | 4,213 | 4,190 | -4% |
| Exchange | 200%-400% FPL | - | - | 6,892 | 7,191 | 7,771 | 7,940 | 8,032 | 8,110 | 18% |
| | **Subtotal Exchange** | **-** | **-** | **13,674** | **14,040** | **14,841** | **15,056** | **15,199** | **15,295** | **12%** |
| Medicaid | <200% FPL | 24,636 | 24,973 | 29,469 | 29,974 | 30,608 | 31,048 | 31,414 | 31,728 | 29% |
| Medicaid | >400% FPL | 2,894 | 2,919 | 2,626 | 2,619 | 2,619 | 2,642 | 2,663 | 2,680 | -7% |
| Medicaid | 200%-400% FPL | 8,902 | 9,012 | 8,139 | 8,276 | 8,421 | 8,535 | 8,651 | 8,753 | -2% |
| | **Subtotal Medicaid** | **36,432** | **36,904** | **40,234** | **40,868** | **41,647** | **42,225** | **42,728** | **43,161** | **18%** |
| Medicare | <200% FPL | 9,551 | 9,885 | 10,217 | 10,572 | 10,912 | 11,244 | 11,591 | 11,952 | 25% |
| Medicare | >400% FPL | 10,725 | 11,106 | 11,477 | 11,864 | 12,231 | 12,602 | 12,989 | 13,389 | 25% |
| Medicare | 200%-400% FPL | 7,661 | 7,939 | 8,210 | 8,500 | 8,778 | 9,050 | 9,336 | 9,632 | 26% |
| | **Subtotal Medicare** | **27,937** | **28,930** | **29,903** | **30,936** | **31,920** | **32,896** | **33,916** | **34,973** | **25%** |
| Uninsured | <200% FPL | 17,248 | 17,628 | 12,040 | 11,968 | 11,844 | 12,047 | 12,216 | 12,372 | -28% |
| Uninsured | >400% FPL | 9,692 | 9,923 | 4,770 | 5,340 | 5,478 | 5,709 | 5,933 | 6,136 | -37% |
| Uninsured | 200%-400% FPL | 12,421 | 12,866 | 7,140 | 7,084 | 6,838 | 7,005 | 7,131 | 7,228 | -42% |
| | **Subtotal Uninsured** | **39,361** | **40,416** | **23,950** | **24,393** | **24,160** | **24,761** | **25,281** | **25,736** | **-35%** |
| Off-Exchange | <200% FPL | 879 | 867 | 383 | 366 | 388 | 401 | 386 | 394 | -55% |
| Off-Exchange | >400% FPL | 5,593 | 5,601 | 4,550 | 4,328 | 4,421 | 4,419 | 4,357 | 4,306 | -23% |
| Off-Exchange | 200%-400% FPL | 2,711 | 2,717 | 1,377 | 1,401 | 1,462 | 1,505 | 1,515 | 1,526 | -44% |
| | **Subtotal Off-Exchange** | **9,183** | **9,185** | **6,310** | **6,095** | **6,271** | **6,324** | **6,258** | **6,227** | **-32%** |

Source: McKinsey analysis prepared for MedStar Health

This analysis, completed early in Spring 2013, estimates an increase in the number of insured service area residents and a decrease in the number of uninsured. Due to current issues with both the Federal and State health exchange web sites, it is unclear how the estimated number of residents who buy insurance on the exchange will be impacted. It is also unclear how utilization (of emergency department and other services) will change as people are newly insured.

**b. Identify efforts by MSMHC to divert non-emergency cases from the emergency department to more appropriate primary care or urgent care settings and quantify the impact of such efforts.**

Hospital emergency departments are required to see all patients as part of discharge instructions. Patients are strongly encouraged to make appointments with their own physicians or other providers for follow-up care. These referrals are written in the discharge instructions. A nurse goes through the instructions with patients. All patients are offered a Medical Screening Exam and non-emergent diagnostic workups are immediately referred to an outpatient facility or primary care provider. See also discussion of MedStar's Distributed Care Delivery Network in response to questions #19b and #24.

c. **Explain how the projected ED visits as shown in Figure 5 support the need for the increase in treatment rooms from the current 41 to the proposed 53.**

The calculation of the required increase in treatment rooms in the ED in the proposed project has been based on the projected volumes of visits, measured against Perkins+Will's benchmark resources and tempered by the planning team's observations of the existing practices and finally, specific discussion with the ED staff to thoroughly understand the existing conditions and to recommend the most efficient way to size and organize the additional space required to accommodate the anticipated increased patient volumes.

According to Jon Huddy's *Emergency Department Design: A Practical Guide to Planning for the Future* (Huddy, 2006, 2nd edition) MedStar Southern Maryland Hospital Center's Emergency Department is aligned as a "High Range" Emergency Department. This is a result of imaging studies being done in the Emergency Department, a large number of psychiatric patients presenting to the Emergency Department, and the fact that the hospital admits, or places on observation, more than 20% of its patients. The ED service at MSMHC also sees more medically complex patients through its designated stroke center status and PCI program. Based upon this High Range designation and projected volumes, Huddy's Guide recommends an ED size of 54 formal treatment spaces.

Another factor to consider is the inclusion of triage areas in the bed count. Two of the current treatment rooms are Triage / Intake areas and are not routinely used as formal treatment spaces. Three of the proposed treatment spaces will be dedicated as Triage / Intake areas, and will not be routinely used as formal treatment spaces. Finally, if Figure 5 in the application, page 35, is extended to 2020 consistent with the volume projections, the volume for which we are planning is evident at over 75,000 visits.

**19. Regarding COMAR 10.24.10.04(B)(15), please respond to the following:**

a. **Where does MSMHC refer non-emergent cases for primary care and alternative facilities or programs?**

Non-emergent cases are referred to outpatient specialist or primary care providers. Patients without primary care providers are referred to the MedStar Southern Maryland Lakeside Family Practice.

b. **Besides the Medical Screening Exam, how does MSMHC educate or inform people regarding alternatives to utilizing emergency rooms for care.**

MedStar is building a system-wide Distributed Care Delivery Network (see response to question #24 for more information). The ambulatory care network, including patient centered medical homes, are major components of this effort, and reducing health care utilization and costs system-wide, including in the inpatient as well as emergency departments, is one of the primary goals of this network.

**20. Regarding COMAR 10.24.10.04(B)(16), please respond to the following:**

**a. Present an analysis that demonstrates that the fourth floor (Level 04) shelled space area will have a positive net present value for MSMHC as required by subpart (b) of the standard.**

Constructing the elevated shell space at a later date would require the following, all of which would incur significant additional costs:

1) Remobilization and start-up costs for the general contractor
2) Intermittent and repeated temporary partial shutdown of the Nursing Observation Unit (Level 03) in order to accommodate construction above
3) Likely escalation in cost of labor and building materials
4) Temporary partial closure of employee or visitor parking in order to accommodate construction staging
5) Operational interference associated with site construction traffic and debris
6) Operational interference associated with interior construction traffic and debris
7) Temporary measures to control interior construction dust, airborne debris, and contamination

While it is difficult to estimate the magnitude of these costs without detailed operational and logistical plans, the hospital would certainly incur significant additional costs associated with restarting construction. The additional construction costs alone, based on a square foot allocation, would exceed $1,059,000. The operational costs are estimated at $1,260,000.

See Exhibit 15 for a comparison of the present value of construction the shell space now versus in 2021.

**b. When is it anticipated that the 5,100 square feet (SF) of shell space on the Westside will be used for expansion of the cafeteria and kitchen?**

The timing of the finishing and use of this space has not yet been determined. A

decision regarding the use of this space will be made at a later date, as yet undetermined.

c. **When does MSMHC anticipate a decision on the use and the finishing of the shell space in the Southwest corner?**

The timing of the finishing and use of this space has not yet been determined. However, we are actively evaluating options for this space, and we believe we will have a plan before we start construction.

d. **Please provide the cost of constructing each of the shell space areas separately, which includes those portions of contingency allowance, inflation allowance, and capitalized construction interest related to each shell space area. Explain how each of these costs was derived.**

Approximate cost break-out for core and shell spaces on levels 00 and 04 are shown below. These costs include all markups and adjustments.

**Shell Space Cost Breakout**

| | Level 00 | Level 04 |
|---|---|---|
| Building | $1,075,000 | $3,700,000 |
| Site Preparation [1] | 475,990 | 138,294 |
| A/E Fees (10% of cost) | 107,500 | 370,000 |
| Permits [2] | 5,460 | 18,794 |
| Contingencies (5%) | 66,313 | 228,239 |
| Interest Capitalized [3] | 139,014 | 478,468 |
| Inflation [4] | 130,366 | 448,702 |
| **Total** | **$1,999,643** | **$5,382,497** |

[1] allocated as proportion of total site prep cost
[2] 75% of estimate of total permit cost
[3] As a percent of total project interest costs
[4] 10% escalation for hard costs, 8% for soft costs

**Response to State Health Plan for Facilities and Services: General Surgical Services, COMAR 10.24.11**

21. **Regarding COMAR 10.24.11.05(B)(1 and 2), please provide a service area population based analysis of the need for the 10 operating rooms that MSMHC is proposing to maintain and replace. This demonstration of need shall use the operating room capacity assumptions and other guidance included in Regulation .06 of the General Surgical Services plan chapter.**

COMAR 10.24.11.05B(1) does not apply to this project because MSMHC is not "proposing to establish a new hospital" or "a new ambulatory surgical facility", or to

"expand the number of operating rooms". COMAR 10.24.11.05B(2) also does not apply to this project because MSMHC is not proposing to "establish or replace a hospital or ambulatory surgical facility".

**22. Regarding COMAR 10.24.11.05(B) (8), please provide Tables 2 and 4 for the 10 licensed operating rooms at MSMHC for FY 2015 through FY 2020, and provide the assumptions used in the utilization and revenue and expense statements for the surgery department.**

See Exhibit 16 for Table 2, and Exhibit 17 for Table 4.

**Need, 10.24.01.08G(3)(b)**

**23. Please provide a detailed description of the forecasting tool used by Sg2 to project future need by service line.**

MedStar Health uses the Impact of Change© forecasting model from Sg2 to project volume as part of planning processes. The Sg2 methodology is confidential and proprietary. The Sg2 forecast provides a detailed look at how key impact factors—from payment reform to population health management—will affect demand for both inpatient and outpatient services over the next decade. Factors considered in the Sg2 model include:

- Population (e.g., population growth/decline and aging)
- Epidemiology (e.g., changes in disease rates and impact of prevention measures)
- Economics (e.g., unemployment rates)
- Payment and policy (e.g., coverage expansion, cost sharing)
- Innovation and Technology (e.g., new technology, shift in care delivery sites)
- Systems of CARE (e.g., coordination and integration across sites of care)
- Potentially Avoidable Admissions (e.g., volumes expected to shift to ambulatory settings)
- Thirty Day Readmissions

The forecasts are available on a service line, disease and/or procedure level across inpatient and outpatient care settings.

**24. The Department of Health and Mental Hygiene's "Maryland's All Payer Model," submitted to the Centers for Medicare and Medicaid Innovation on October 11, 2013, anticipates that, "The CON program would support the success of the Maryland All- Payer Model by considering the goals and objectives of the model**

**in its decisions to approve or deny health care facility projects by requiring health care facilities to demonstrate that their projects are viable without reliance on continually growing service volume." Given this expectation, can the applicant demonstrate that the proposed project's utilization forecasts are consistent with a future in which demand for hospital admissions by the hospital's service area population (i.e., the acute hospital use rate of the service area population) is trending down, consistent with the Model's expectations?**

Regarding the utilization projections, the application's forecasts are based on the Sg2 modeling, which accounts for both population growth and aging as well as factors pushing use rates down, such as the economy, payment and policy changes and shifts to outpatient care (see response to Q23). The projected volume increases shown on Table 1 are due to the hospital's new association with MedStar Health and the reduction in outmigration of Prince George's County residents for routine hospital care that will result with locating hospital services and providers at MSMHC. We are increasingly integrating services that are provided at MedStar Washington Hospital Center and MedStar Georgetown University Hospital into MSMHC. The same physicians that provide these services are coming to MSMHC so patients don't have to travel for same services.

Regarding the goals and objectives of the new All-Payer Model, MedStar Health has been actively developing population health management initiatives for several years that will position the organization as a strong provider in a new health care environment. These initiatives are already underway at work to reduce healthcare utilization and costs and improve population health. Please see Exhibit 18 for a description of these initiatives.

**25. Demonstrate that the proposed project's utilization projections are consistent with a future in which the demand for hospital admissions by the hospital's service area population (i.e., the acute hospital use rate of the service area population) is trending down.**

In order to determine the projected volume for this project, MedStar utilized the Sg2 forecast model in several different ways. The first was a traditional population-based forecast. This does not account for any of the impact factors decsribed above. Using only a population based forecast, the MSMHC service area discharges are forecasted to grow 14% overall between FY 2012 and FY 2021 as shown in the table below:

| | | DISCHARGES | | | | | | | | | | | |
|---|---|---|---|---|---|---|---|---|---|---|---|---|---|
| Age Group | CON Category | FY12 | FY13 | FY14 | FY15 | FY16 | FY17 | FY18 | FY19 | FY20 | FY21 | Chg | % Chg |
| Age 0-64 | MSGA | 31,816 | 30,914 | 31,132 | 31,350 | 31,569 | 31,788 | 32,004 | 32,222 | 32,444 | 32,660 | 844 | 2.7% |
| | OB | 8,254 | 8,138 | 8,128 | 8,118 | 8,108 | 8,099 | 8,088 | 8,078 | 8,069 | 8,058 | (196) | (2.4%) |
| | Other (Nursery) | 7,714 | 7,578 | 7,567 | 7,557 | 7,545 | 7,534 | 7,523 | 7,513 | 7,502 | 7,490 | (224) | (2.9%) |
| | Pediatric | 3,321 | 3,402 | 3,411 | 3,420 | 3,430 | 3,439 | 3,448 | 3,456 | 3,467 | 3,476 | 155 | 4.7% |
| | Psych | 4,032 | 3,867 | 3,893 | 3,920 | 3,946 | 3,973 | 3,999 | 4,026 | 4,053 | 4,079 | 47 | 1.2% |
| | Rehab | 467 | 441 | 444 | 448 | 451 | 455 | 458 | 461 | 465 | 468 | 1 | 0.2% |
| | **Subtotal Excl Nursery** | **47,890** | **46,762** | **47,008** | **47,256** | **47,504** | **47,754** | **47,997** | **48,243** | **48,498** | **48,741** | **851** | **1.8%** |
| Age 65+ | MSGA | 19,374 | 19,428 | 20,479 | 21,530 | 22,581 | 23,631 | 24,682 | 25,736 | 26,785 | 27,837 | 8,463 | 43.7% |
| | Psych | 263 | 265 | 279 | 293 | 307 | 321 | 334 | 348 | 362 | 376 | 113 | 43.0% |
| | Rehab | 291 | 316 | 333 | 350 | 367 | 385 | 402 | 419 | 436 | 453 | 162 | 55.7% |
| | **Subtotal Excl Nursery** | **19,928** | **20,009** | **21,091** | **22,173** | **23,255** | **24,337** | **25,418** | **26,503** | **27,583** | **28,666** | **8,738** | **43.8%** |
| Total | MSGA | 51,190 | 50,342 | 51,611 | 52,880 | 54,150 | 55,419 | 56,686 | 57,958 | 59,229 | 60,497 | 9,307 | 18.2% |
| | OB | 8,254 | 8,138 | 8,128 | 8,118 | 8,108 | 8,099 | 8,088 | 8,078 | 8,069 | 8,058 | (196) | (2.4%) |
| | Other (Nursery) | 7,714 | 7,578 | 7,567 | 7,557 | 7,545 | 7,534 | 7,523 | 7,513 | 7,502 | 7,490 | (224) | (2.9%) |
| | Pediatric | 3,321 | 3,402 | 3,411 | 3,420 | 3,430 | 3,439 | 3,448 | 3,456 | 3,467 | 3,476 | 155 | 4.7% |
| | Psych | 4,295 | 4,132 | 4,172 | 4,213 | 4,253 | 4,294 | 4,333 | 4,374 | 4,415 | 4,455 | 160 | 3.7% |
| | Rehab | 758 | 757 | 777 | 798 | 818 | 840 | 860 | 880 | 901 | 921 | 163 | 21.5% |
| | TOTAL Excl Nursery | 67,818 | 66,771 | 68,099 | 69,429 | 70,759 | 72,091 | 73,415 | 74,746 | 76,081 | 77,407 | 9,589 | 14.1% |

Source: D.C. Hospital Association Database for FY 2012 volume and Sg2 forecast for FY 2013-2021; includes MSMHC service area zip codes (defined as the zip codes from which 85% of the hospitals FY 2012 discahrges originated)

In order to account for decreasing hospital use rates, MedStar also considered the service area volume forecast using Sg2's Impact of Change© methodology. As shown in the table below, that analysis leads to a forecasted volume decline for the MSMHC service area of .8%:

| | | DISCHARGES | | | | | | | | | | | |
|---|---|---|---|---|---|---|---|---|---|---|---|---|---|
| Age Group | CON Category | FY12 | FY13 | FY14 | FY15 | FY16 | FY17 | FY18 | FY19 | FY20 | FY21 | Chg | % Chg |
| Age 0-64 | MSGA | 31,816 | 30,914 | 30,907 | 30,634 | 30,146 | 29,525 | 28,965 | 28,483 | 28,096 | 27,777 | (4,039) | (12.7%) |
| | OB | 8,254 | 8,138 | 8,107 | 8,102 | 8,126 | 8,158 | 8,195 | 8,198 | 8,158 | 8,094 | (160) | (1.9%) |
| | Other (Nursery) | 7,714 | 7,578 | 7,527 | 7,500 | 7,499 | 7,527 | 7,570 | 7,627 | 7,656 | 7,628 | (86) | (1.1%) |
| | Pediatric | 3,321 | 3,402 | 3,396 | 3,388 | 3,372 | 3,346 | 3,310 | 3,273 | 3,237 | 3,196 | (125) | (3.8%) |
| | Psych | 4,032 | 3,867 | 3,939 | 3,984 | 4,030 | 4,080 | 4,127 | 4,154 | 4,162 | 4,163 | 131 | 3.2% |
| | Rehab | 467 | 441 | 436 | 428 | 419 | 411 | 403 | 393 | 380 | 367 | (100) | (21.4%) |
| | **Subtotal Excl Nursery** | **47,890** | **46,762** | **46,785** | **46,536** | **46,093** | **45,520** | **45,000** | **44,501** | **44,033** | **43,597** | **(4,293)** | **(9.0%)** |
| Age 65+ | MSGA | 19,374 | 19,428 | 20,276 | 20,929 | 21,380 | 21,670 | 21,944 | 22,235 | 22,567 | 22,920 | 3,546 | 18.3% |
| | Psych | 263 | 265 | 282 | 298 | 314 | 330 | 346 | 360 | 373 | 385 | 122 | 46.4% |
| | Rehab | 291 | 316 | 327 | 334 | 341 | 348 | 354 | 356 | 356 | 353 | 62 | 21.3% |
| | **Subtotal Excl Nursery** | **19,928** | **20,009** | **20,885** | **21,561** | **22,035** | **22,348** | **22,644** | **22,951** | **23,296** | **23,658** | **3,730** | **18.7%** |
| Total | MSGA | 51,190 | 50,342 | 51,183 | 51,563 | 51,526 | 51,195 | 50,909 | 50,718 | 50,663 | 50,697 | (493) | (1.0%) |
| | OB | 8,254 | 8,138 | 8,107 | 8,102 | 8,126 | 8,158 | 8,195 | 8,198 | 8,158 | 8,094 | (160) | (1.9%) |
| | Other (Nursery) | 7,714 | 7,578 | 7,527 | 7,500 | 7,499 | 7,527 | 7,570 | 7,627 | 7,656 | 7,628 | (86) | (1.1%) |
| | Pediatric | 3,321 | 3,402 | 3,396 | 3,388 | 3,372 | 3,346 | 3,310 | 3,273 | 3,237 | 3,196 | (125) | (3.8%) |
| | Psych | 4,295 | 4,132 | 4,221 | 4,282 | 4,344 | 4,410 | 4,473 | 4,514 | 4,535 | 4,548 | 253 | 5.9% |
| | Rehab | 758 | 757 | 763 | 762 | 760 | 759 | 757 | 749 | 736 | 720 | (38) | (5.0%) |
| | **Grand Total Excl Nursery** | **67,818** | **66,771** | **67,670** | **68,097** | **68,128** | **67,868** | **67,644** | **67,452** | **67,329** | **67,255** | **(563)** | **(0.8%)** |

Source: D.C. Hospital Association Database for FY 2012 volume and Sg2 forecast for FY 2013-2021; includes MSMHC service area zip codes (defined as the zip codes from which 85% of the hospitals FY 2012 discahrges originated)

Using the Impact of Change© forecast and making assumptions about increases in market share based on MedStar strategic initiatives, MedStar developed the projected volume presented in Table 1 of the CON application.

Strategic initiatives anticipated to grow volume include general ambulatory care development to improve access to services for the community as well as specific service line strategies to build inpatient and outpatient volume:

| Service Line | Program Development |
|---|---|
| Cardiovascular | • Establish the MedStar Heart Institute at MSMHC<br>• Expand electrophysiology capability<br>• Extend and expand programs in advanced heart failure and women's heart disease<br>• Develop cardiovascular ambulatory service offerings at MSMHC Family Medical Centers<br>• Expand service offerings in peripheral vascular interventions<br>• Establish community based vascular screening |
| Oncology | • Establish the MedStar Cancer Network at MSMHC<br>• Expand surgical capabilities for a broad range of cancers including breast and colorectal<br>• Develop infusion therapy services<br>• Develop ambulatory treatment capabilities and access to specialists on both the MSMHC campus and community locations<br>• Offer access to clinical trials |
| Orthopaedics | • Enhance relationship between MedStar Georgetown Orthopaedic Institute surgeons and MSMHC surgeons |
| Neurosurgery | • Build select services and local outreach programs |
| Surgery | • Increase the number of MedStar faculty surgeons with offices/session time on the MSMHC campus |
| Gynecology | • Support the recruitment of additional OB/Gyn's to the MSMHC campus and MSMHC Family Medical Centers in the community |

See also first paragraph of response to Question #24, above.

**26. Please specify the market share changes referred to on page 47.**

MSMHC's market share of its total service area (defined based on the zip codes from which 85% of inpatients originate) has declined 2.3 points since FY 2009 as shown in the table below:

| MedStar Southern Maryland Hospital Center Market Share - All Service Lines | | | | | | | | | | |
|---|---|---|---|---|---|---|---|---|---|---|
| Hospital | FY2009 | | FY2010 | | FY2011 | | FY2012 | | FY2013* | |
| | Volume | % Total | Volume | % Total | Volume | % Total | Volume | % Total | Volume | % Total |
| MedStar Southern Maryland | 15,497 | 21.5% | 15,110 | 20.6% | 15,156 | 20.8% | 14,658 | 20.6% | 13,424 | 19.2% |
| Other Hospitals | 56,656 | 78.5% | 58,235 | 79.4% | 57,876 | 79.2% | 56,557 | 79.4% | 56,436 | 80.8% |
| **Total** | 72,153 | 100.0% | 73,345 | 100.0% | 73,032 | 100.0% | 71,215 | 100.0% | 69,860 | 100.0% |

Source: D.C. Hospital Association Database; service area definition based on FY 2012 data; *FY 2013 annualized based on three quarters of available data. Excludes newborns.

We plan to recapture this lost market share by working with the MedStar system's strategic program development, bringing new hospital services and physicians to MSMHC. Programs are being developed at the hospital to provide services to service area residents to restore this market share.

As shown below, in FY 2012, 12,985 discharges from MSMHC's total service area were discharged from the MedStar Washington Hospital Center and MedStar Georgetown University Hospital. There were also over 2,200 discharges from this service area at hospitals in northern Virginia. As services are integrated at MSMHC, outmigration for routine services should decrease as more patients receive care in the neighborhood where they live. If just 25% of those cases previously discharged from MWHC and MGUH were instead cared for at MSMHC, the increased volume projected in the CON application would be more than realized, even if the market share changes expected from the relocation of Prince George's Hospital Center are considered.

## MSMHC's Service Area Out-Migration Analysis

| Service Area | Total Discharges | MSMHC Discharges | MWHC Discharges | MGUH Discharges | Other DC Hospitals | Any Virginia Hospital |
|---|---|---|---|---|---|---|
| PSA | 32,850 | 10,824 | 4,225 | 1,301 | 3,709 | 1,351 |
| SSA | 38,365 | 3,834 | 6,040 | 1,419 | 12,144 | 875 |
| Total | **71,215** | **14,658** | **10,265** | **2,720** | **15,853** | **2,226** |

Source: PCA database, FY 2012

**27. Demonstrate the need for the 24 ICU/CCU beds proposed.**

The current total critical care bed capacity is 18 beds. Admissions to the Critical Care unit reach the 18-bed limit with some frequency as depicted in the daily census trend chart below. For January through September 2013, the census averaged 16 patients, and was at 18 patients for 61 days, or 22% of the time. The number of peak census days was as high as 55% during the month of January. Table 1 reflects conservative annual growth in Critical Care admissions of 2% annually from 2014 to 2018.

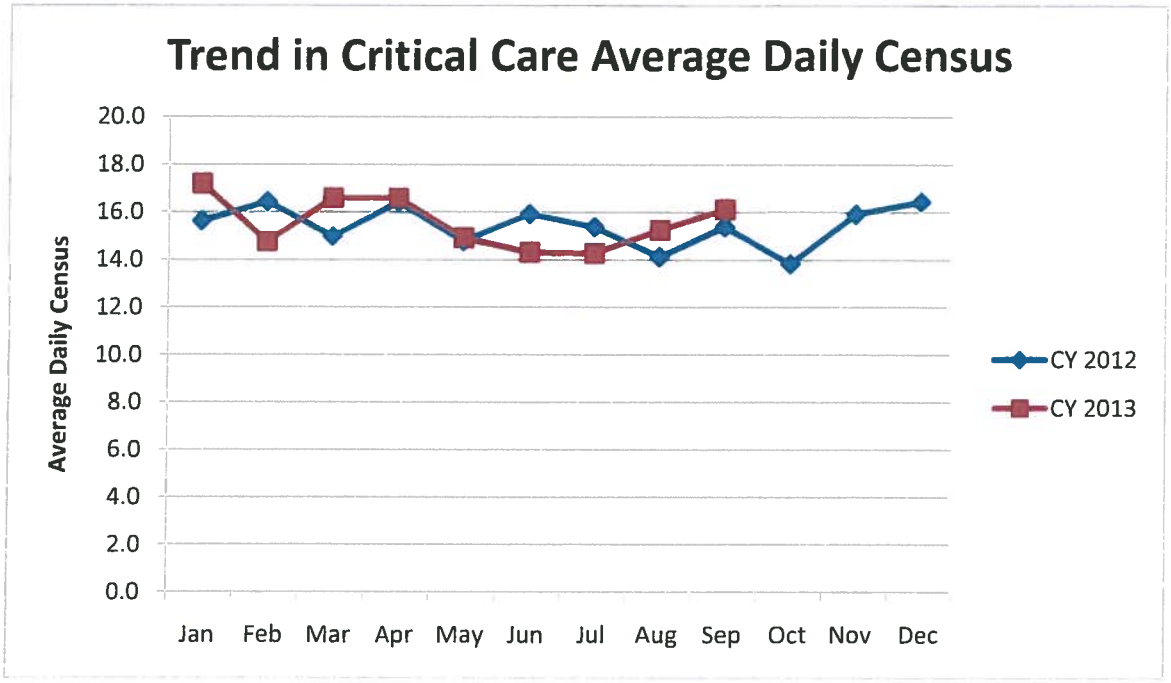


ED diversions add yet another dimension to the impact that bed capacity constraints in Critical Care can have as a contributory limitation, representing 30% of Red Alert events for the same time period of January through September 2013. Yellow Alert events signify the hospital emergency department is overwhelmed by volume demand, representing 48% of reasons EMS receives proactive diversion notification from the hospital. This is followed by EMS triggered "re-route" of 22% over the same period. However, the total number of hours in which the hospital ED is placed on diversion status reflects Red Alert as the principle contributing reason. As exemplified by the chart below, Red Alert status accounted for 545 hours of diversion compared with Yellow Alert at 389-hours and EMS triggered re-route at 75-hours. While recent efforts in the Emergency Department have reduced Yellow Alert hours, the ICU capacity problems are clearly reflected in the increasing Red Alert hours.

**Emergency Department Diversion Hours, by Diversion Type**

| Diversion Type | Hours, CY 2012 | Hours, CY 2013 thru Sept |
|---|---|---|
| Red Alert | 572 | 545 |
| Yellow Alert | 750 | 389 |
| Re-Route | 88 | 75 |

The pressures attributable to capacity constraints in Critical Care, exemplified by these

two sets of trend data, are impactful to operations often on a daily basis, and certainly weekly and monthly. The nine month average daily bed census of 16 in Critical Care is close to the 18-bed limit, and this does not include the expected impact of added ED volume potential when the number of treatment bays increases from 28 to 53 through the proposed renovation and expansion plan. As stated elsewhere in the CON submission, the ED is projected to realize consecutive annual visit increases of 2% from 2014 through 2016 with a more substantive one-time increase in 2017 of 6% at the completion of construction.

In addition, the MSMHC plan is to enhance operating room capability and space that will lead to an increase in the number of cases of greater complexity and acuity such as neurosurgical and vascular surgical cases, leading to increased reliance on patient placement in Critical Care.

Adding six Critical Care beds is necessary to accommodate normal demand based on current admission constraints (that are certainly impactful to the ED), and increased need based on projected growth in ED, OR and Cardiovascular service lines.

**28. Please demonstrate the need to establish a 32-bed Observation Unit.**

Short-stay observation status patients are presently intermixed with other more acutely ill patients on nursing units that may have patients on various types of isolation. Patient care can be more efficiently rendered to this unique population of patients in an environment where they are not cohorted with more acutely ill in-patients with longer lengths of stay and different needs. For future planning purposes, creating such a unit will allow for a shift towards transforming current semi-private in-patient rooms to private occupancy by easing occupancy pressures in the medical-surgical units.

Not unlike any other acute care general hospital, a growing proportion of patients at MSMHC are relegated to outpatient observation of preferably 24-hours but not to exceed 48-hours. From its inception MSMHC has seen double digit increases in the trend towards observation (23% increase from 2011 to 2012, and 24% from 2012 to 2013.[1] The average daily number of beds in which patients are placed in observation status from January through September 2013 is 24 beds. This can vary greatly as seen in the 2013 plot chart below, and it is noteworthy that there has been a double-digit increase in the shift to observation status since the HSCRC released a rate order in 2010 the significance of which can be discerned on the following chart depicting the monthly census trend from January 2011 through September 2013.

[1] See Revised Table 1 (Exhibit 21).

Architectural designers were able to create a space in the Expansion and Renovation Project that would facilitate establishment of a 32-bed unit. Plotting the monthly census data over the course of 2011, 2012 and 2013 (through September) on the chart below and applying both a Moving Average and a Linear Trend Line, indicates daily census projected to increase to 26 in 2014, and 33 in 2015. It certainly appears that the proposed Observation unit will accommodate this future growth by the time construction is completed.

The 2013 Observation Status Trend chart below depicts actual daily and month census trends summarized with a 9-month comparative against the same period in 2011 and 2012. Daily average length of stay (in hours) on observation is also depicted.

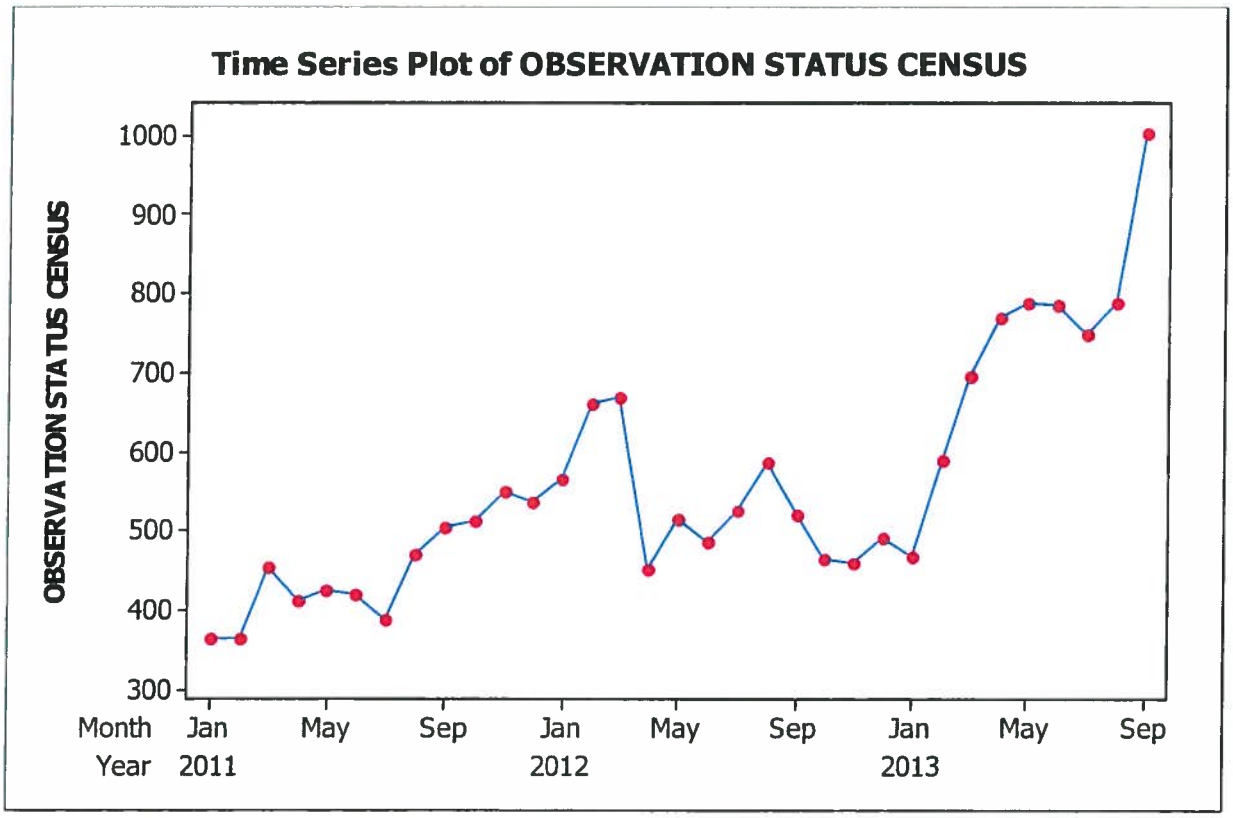

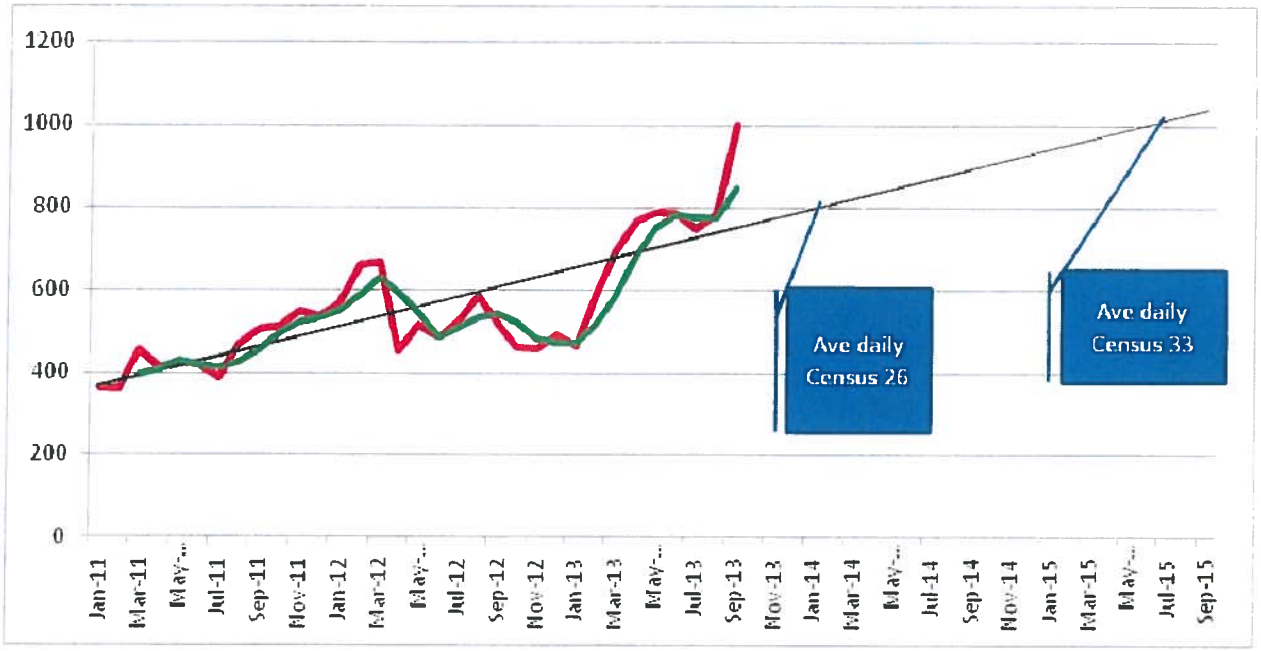


Monthly Observation Status Census Trend January 2011 through September 2013 (**Red Line**) with Moving Average (**Green Line**), and Linear Regression Trend Line depicting steady annual growth with the following projected changes:

- January through September Average Daily Census = 24
- Linear growth projects Average Daily Census of 26 in early 2014 and 33 by mid-year 2015
- Hence the need for developing a **dedicated 32-bed Observation Unit**

**29. Please identify, under Table 1, Patient Mix, the source of the Revenue and Patient Days identified as Other. Reconcile the difference in Patient Mix reported in Table 1 with the Sources of Net Patient Service Revenue reported for year ending December 9, 2012 in Attachment 7, Audited Financial Statements, addressing the difference in payer source for Medicaid, Commercial Insurance, and Other. What assumptions does MSMHC use to support a patient mix of only 4.3% Medicaid population from FY 2014 through 2018, especially since the audited financial statements indicate the hospital received 18% of revenue from Medicaid as of December 9, 2012?**

The initial filing included Medicaid MCO in the Other category. Revised Table 1 reflects Medicaid MCOs in the Medicaid category.

**Availability of More Cost-Effective Alternatives, 10.24.01.08G(3)(c)**

30. **Are Option B and Option C, discussed in the response to this criterion, the same as Option 2 and Option 3 in the response to the Cost-Effectiveness standard of the SHP for Acute Care Hospital Services, COMAR 10.24.10.04(B)(5)? Is Option A, as described in the response to this criterion, the same as the Option 1 referred to in the response to the Cost Effectiveness standard of the SHP? If not, please explain the options referenced in the response to this criterion in relationship to the options referred to in the response to the SHP standard.**

Our response to this criterion inadvertently substituted "Option A," "Option B," and "Option C" for design options referred to elsewhere in the application as "Option 1," "Option 2," and "Option 3," respectively.

31. **Please explain why the additional service volumes to be accommodated in the proposed facility and service expansions included in this project cannot be provided more cost effectively at alternative existing facilities.**

As described in "Maryland's All-Payer Model--Proposal to the Center for Medicare and Medicaid Innovation", at page 7, the all-payer per capita cost of hospital care in the District of Columbia is substantially higher than the all-payer per capita cost of hospital care in Maryland ($4,948 versus $2,767, based on data for 2009, the latest available). As explained elsewhere in these answers, the incremental patient volume which MSMHC is projecting in this application would come almost entirely from MedStar hospitals in the District of Columbia. If those patients were instead treated at existing facilities in the District of Columbia, the cost to the health care system would be substantially higher.

**Viability of the Proposal, COMAR 10.24.08G(3)(d)**

32. **Identify the source(s) of the cash contribution of $32,100,188 that will be used to fund the project.**

The source of the cash contribution is MedStar Health, Inc. The amount of this contribution to the project has been revised to $37,432,204. See the revised project budget.

**33. Please provide audited financial statements for the past two years for MedStar Health System.**

See Exhibit 19.

**34. Please identify the anticipated debt-financing vehicle and specify the terms of such financing (interest rate and the length of the loan). Submit an amortization table.**

The debt will be issued through a 30-year tax exempt bond with a fixed 6% interest rate. See Exhibit 20 for the associated amortization table.

**35. Regarding Tables 1 and 3, please project the utilization and the expected revenue and expenses through FY 2020.**

See Exhibit 21 for revised Table 1, and Exhibit 22 for revised Table 3.

**36. With respect to Table 3, please provide the following additional information and clarifications:**

**a. Please specify the assumptions regarding hospital rates and charges and submit detail on the calculation of revenue projections, both inpatient and outpatient.**

See Table 3, Exhibit 22.

**b. What is included and will be included in other operating revenues (line 1h) and explain why it increases so much from 2012 to 2013 (285%) and why it is expected to increase another 21% from 2013 to 2014.**

Differences between 2012 and 2013, as shown below, are due to classification differences between non-operating and other revenue between prior hospital ownership and MedStar. Table 3 has been updated to more properly reflect the classification going forward. Line 1h does and will include in the future miscellaneous revenues such as cafeteria sales, gift shop sales, telephone income, medical records abstracts, and vending revenue. The increase in total non-operating and other operating revenues collectively, is due to a loss in 2012 on investments that was not reoccurring.

| Other Operating Revenue | FY 2012 | FY 2013 |
|---|---|---|
| CAFETERIA SALES | (390,731) | (413,517) |
| GIFT SHOP SALES | | (183,601) |
| MISCELLANEOUS REVENUE | (156,491) | (171,007) |
| OTHER | (1,030) | (581) |
| TELEPHONE | (174,565) | (290,546) |
| VENDING SALES/RENTALS | | (5,505) |
| MED RECORDS ABSTRACTS | (101,761) | (67,251) |
| G/L on investments | 215,201 | (105,417) |
| **Total** | **(609,377)** | **(1,237,427)** |

c. **Specify your assumptions with respect to the variability of expenses with volume and explain why you think they are reasonable.**

We have assumed the expenses will be 58% variable as volumes increase, consistent with current HSCRC methodology and historical experience. We believe these assumptions are reasonable because they are based on historical trends.

d. **Provide further explanation of why physician revenues and expenses have been eliminated**

The contracted physicians and CRNAs have been excluded from the hospital figures because all previously employed physicians have now been transferred to MedStar Physicians, LLC which performs the billing for Part B services. Thus, in order to normalize the comparison between years, all associated revenue and expense has been eliminated.

e. **Submit a Table 5 that ties into the Table 3 (the total from Table 5 should equal the salaries, wages and professional fees (line 2a) of Table 5) and should show the change in staffing as a result of this project. It may be necessary to add a column to account for other expected staff increases.**

Table 5 in the application shows incremental costs, and represents an estimate of the FTEs required for the incremental volume changes. These various job classifications were then compared to our current salary scales to arrive at the total increase in salaries and wages based on the project. We utilized targeted hours per patient day for nursing care, square footage for Environmental Services, Plant Operation, etc., and productivity numbers for other departments involved with volume changes. Table 3's staff expenses reflects total staffing costs.

**f. Explain the large increase in contractual services from 2012 to 2013 (43.4%) and large decrease from 2013 to 2014 (51.8%).**

Much of this variance in contractual services between FY 2012 and FY 2013 is attributable to the change in ownership and the conversion from calendar year to fiscal year.

**g. Explain the large increase in interest on current debt from 2012 to 2013 (94%) and the still larger increase from 2013 to 2014 (235%).**

Much of this variance in interest expense is attributable to the transition from a calendar year to a fiscal year, as well as the change in ownership. The increase in 2014 numbers include the financing costs associated with the purchase of the hospital by MedStar Health.

**h. Identify the components of Other Expenses (Table 3 line 2j) and breakdown the expenses accordingly. Explain why these expenses decreased by 12% from 2012 to 2013 and are expected to decrease another 14% from 2013 to 2014.**

The decrease in Other Expenses from 2012 to 2013 is the result of decreased management fees due to the change from prior owners to MedStar ownership, offset partially by an allocation of MedStar corporate expenses. Additionally, the decrease is contributed to the decrease in insurance costs in 2013 over 2012.

The decrease from 2013 to 2014 is largely due to the elimination of the executory costs, which related to the prior ownership legal structure. The decrease was partially offset by increased allocations of corporate overhead and estimated management fees and malpractice expense in 2014.

| Other Expenses | 2012 | 2013 | 2014 |
|---|---|---|---|
| Insurance | 5,581,116 | 3,995,222 | 6,272,555 |
| Executory Cost | 9,837,164 | 9,665,776 | |
| General and Admin | 4,772,563 | 4,050,973 | 4,208,966 |
| Management Fees | 17,034,398 | 13,881,503 | 15,580,418 |
| Shared Services | | 999,998 | 1,982,092 |
| **Total** | **37,225,241** | **32,593,472** | **28,044,031** |

**i. Explain the increase in current depreciation from 2013 to 2014 of 70%.**

This represents a full year of depreciation post merger, which is based on the MedStar purchase price allocation versus the prior owner's historical cost. MedStar Health transferred all major movable equipment to MSMHC effective 7/1/13. Additionally, during FY 2013 the major movable equipment was leased to MSMHC and was not depreciated.

**37. Submit an alternative Table 3 with inflation along with a statement of all assumptions and explanations of why you think they are reasonable.**

See Exhibit 23 for Table 3 Inflated.

**38. The Department of Health and Mental Hygiene's "Maryland's All Payer Model," submitted to the Centers for Medicare and Medicaid Innovation on October 11, 2013, anticipates that, "The CON program would support the success of the Maryland All- Payer Model by considering the goals and objectives of the model in its decisions to approve or deny health care facility projects by requiring health care facilities to demonstrate that their projects are viable without reliance on continually growing service volume." Given this expectation, can the applicant demonstrate that the proposed project is viable without reliance on continually growing service volume?**

As explained above in response to question #24, growth in volumes in this application is not based on growth in use rates, but on reducing outmigration of routine hospital care for Prince George's County residents to hospitals in Washington DC (principally MedStar hospitals), northern Virginia or Montgomery County. Because the utilization projections are reasonable and not based on increasing use rates, the financial projections demonstrate that the project is viable. From a system-wide perspective, reducing outmigration in Prince George's County for routine health care services should be considered efficient, effective and in the public interest.

**39. Demonstrate that the proposed project is viable without reliance on continually growing service volumes.**

Please see response to questions #24, 25, 26 and 38, above.

**40. Please provide alternative projections of revenues and expenses for the proposed project that are consistent with a variable cost factor that provides the**

**hospital with 50 percent of revenue for incremental increases in volume above the budgeted amount in the hospital's base for the year, consistent with the Maryland All-Payer Model proposal. Provide this alternative projection in both current year dollars and with inflation assumptions for both revenue and expenses.**

See Exhibit 24 for Alternative Table 3 in Current Dollars, and Exhibit 25 for Alternative Table 3 Inflated.

**Impact on Existing Providers, 10.24.01.08G(3)(f)**

41. **This criterion requires applicants to provide information and analysis with respect to the impact of the proposed project on existing health care providers. The response does not provide any analysis. Please provide an analysis of the likely impact of the proposed improvements at MSMHC on other area hospitals, quantifying impact on case volume, days, or outpatient case load at these other hospitals.**

The volume growth projected for MSMHC will have minimal impact on existing health care providers. It is easily expected that MSMHC will meet its volume projections by keeping volume within the MedStar system. Based on FY 2012 data for the MSMHC service area as shown below, almost 13,000 patients leave the MSMHC service area for inpatient care. This includes over 10,000 going to MedStar Washington Hospital Center (MWHC) and over 2,720 traveling to MedStar Georgetown University Hospital (MGUH). MSMHC expects to grow its volume by 2,800 admissions (excluding chronic) as outlined in Table 1 by bringing MWHC and MGUH physicians to the MSMHC campus and service area. This will allow patients to be treated in their community and grow volume at MSMHC. In order to achieve the volumes projected in Table 1 (Exhibit 21), less than 22% of the patients currently leaving the MWMHC service area for MWHC and MGUH would need to remain at MSMHC.

## MSMHC's Service Area Out-Migration Analysis

| Service Area | Total Discharges | MSMHC Discharges | MWHC Discharges | MGUH Discharges | Other DC Hospitals | Any Virginia Hospital |
|---|---|---|---|---|---|---|
| PSA | 32,850 | 10,824 | 4,225 | 1,301 | 3,709 | 1,351 |
| SSA | 38,365 | 3,834 | 6,040 | 1,419 | 12,144 | 875 |
| Total | **71,215** | **14,658** | **10,265** | **2,720** | **15,853** | **2,226** |

Source: PCA database, FY 2012

# List of Exhibits


| | |
|---|---|
| Exhibit 1 | Bed Inventory Form |
| Exhibit 2 | Perkins+Will Benchmarks Graphic |
| Exhibit 3 | Engineering Report |
| Exhibit 4 | Perkins+Will Supplemental Drawings |
| Exhibit 5 | Revised Project Budget |
| Exhibit 6 | Revised Charges Policy |
| Exhibit 7 | Financial Assistance Policy Addendum |
| Exhibit 8 | Published Notice of Financial Assistance Policy |
| Exhibit 9 | Posted Notice of Financial Assistance Policy |
| Exhibit 10 | MedStar Patient Information Sheet |
| Exhibit 11 | CMS Notification Letter |
| Exhibit 12 | Perkins+Will Emergency Department Conditions Report |
| Exhibit 13 | RLB Preliminary Design Cost Estimates |
| Exhibit 14 | Marshall Valuation Analysis |
| Exhibit 15 | Shell Space Present Value Analysis |
| Exhibit 16 | Surgery Department Table 2 |
| Exhibit 17 | Surgery Department Table 4 |
| Exhibit 18 | MedStar's Population Health Initiatives |
| Exhibit 19 | MedStar Health Audited Financial Statements |
| Exhibit 20 | Amortization Table |
| Exhibit 21 | Revised Table 1 |
| Exhibit 22 | Revised Table 3 |
| Exhibit 23 | Table 3 Inflated |
| Exhibit 24 | Alternative Table 3 Current Dollars |
| Exhibit 25 | Alternative Table 3 Inflated |

Hospital Name: Southern Maryland Hospital Center

Date: 11/15/2013

| Location (Floor/Wing) | Existing Physical Capacity | | | | | | Proposed Physical Bed Capacity | | | | | | Notes |
|---|---|---|---|---|---|---|---|---|---|---|---|---|---|
| | | Room Count | | | | Bed Count | | Room Count | | | | Bed Count | |
| | Hospital Service | Total Rooms | Four Bed Rms | Semi-Private | Private | Physical Capacity | Hospital Service | Total Rooms | Four Bed Rms | Semi-Private | Private | Physical Capacity | |
| Tower I 1st Fl. West | General M/S | 13 | 2 | 11 | 0 | 30 | General M/S | 13 | 2 | 11 | 0 | 30 | |
| Tower I 1st Fl. East | General M/S | 16 | 2 | 14 | 0 | 36 | General M/S | 16 | 2 | 14 | 0 | 36 | |
| Tower I 2nd Fl. West | General M/S | 17 | 2 | 15 | 0 | 38 | General M/S | 17 | 2 | 15 | 0 | 38 | |
| Tower I 2nd Fl. East | General M/S | 17 | 2 | 13 | 0 | 34 | General M/S | 17 | 2 | 13 | 0 | 34 | |
| Tower I 3rd Fl. West | General M/S | 17 | 2 | 15 | 0 | 38 | General M/S | 17 | 2 | 15 | 0 | 38 | |
| Tower I 3rd Fl. East | General M/S | 17 | 2 | 15 | 0 | 38 | General M/S | 17 | 2 | 15 | 0 | 38 | |
| Tower I 4th Fl. East | General M/S | 17 | 2 | 15 | 0 | 38 | General M/S | 17 | 2 | 15 | 0 | 38 | |
| Sub-total | General MSGA | 114 | 14 | 98 | 0 | 252 | General MSGA | 114 | 14 | 98 | 0 | 252 | |
| | | | | | | | | | | | | | |
| Tower I 1st Fl. East | ICU/CCU | 9 | 0 | 0 | 9 | 9 | ICU/CCU | 0 | 0 | 0 | | 0 | |
| Main Bldg., 1st Fl. | ICU/CCU | 9 | 0 | 0 | 9 | 9 | ICU/CCU | 0 | 0 | 0 | | 0 | |
| New Addition 02 | | | | | | | ICU/CCU | 24 | 0 | 0 | 24 | 24 | |
| Sub-total | ICU/CCU | 18 | 0 | 0 | 18 | 18 | | | | | | | |
| TOTAL MSGA | MSGA | 132 | 14 | 98 | 18 | 270 | Total MSGA | 138 | 14 | 98 | 24 | 276 | |
| | | | | | | | | | | | | | |
| Tower II 1st Fl. South | Obstetrics | 16 | 0 | 12 | 4 | 28 | Obstetrics | 16 | 0 | 12 | 4 | 28 | Converted to all private in 2010 |
| Tower II 2nd FL North | Obstetrics | 12 | 0 | 0 | 12 | 12 | Obstetrics | 12 | 0 | 0 | 12 | 12 | Added in 2010 |
| | | | | | | | | | | | | | |
| Tower I 2nd Fl. East | Pediatric | 4 | 0 | 2 | 0 | 4 | Pediatric | 4 | 0 | 2 | 0 | 4 | |
| | | | | | | | | | | | | | |
| Tower I 4th Fl. West | Psychiatric | 13 | 0 | 12 | 1 | 25 | Psychiatric | 13 | 0 | 12 | 1 | 25 | |
| | | | | | | | | | | | | | |
| | | | | | | | | | | | | | |
| TOTAL INPATIENT | | 177 | 14 | 124 | 35 | 339 | | 183 | 14 | 124 | 41 | 345 | |

Note: Physical capacity is the total number of beds that could be accommodated without significant renovations. A room with two headwalls and two sets of gasses is a semi-private room, even if it is typically set up and operated with only one bed. A room with one headwall and one set of gasses is counted as a private room, even if it is large enough, from a square footage perspective, to be used as a semi-private room, since renovation/construction would be required to convert it to semi-private use. If the hospital operates patient rooms that contain a single headwall, but are used to accommodate more than one patient (e.g., for psychiatric patients), the physical capacity of such rooms is semi-private, and the bed capacity is as applicable.

# MedStar Southern Maryland Hospital Center

## Benchmark Comparisons

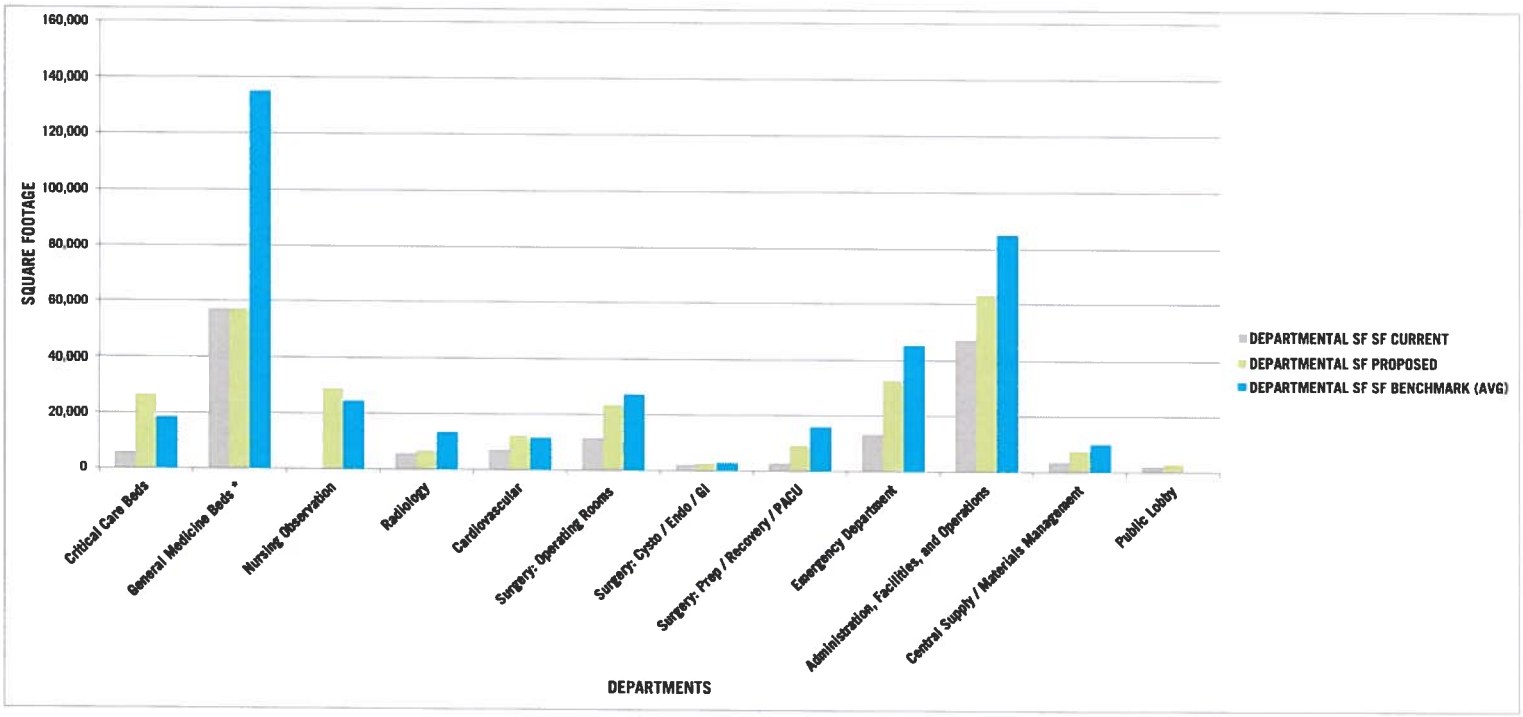


DEPARTMENTAL SF

| | SF CURRENT | SF PROPOSED | SF BENCHMARK (AVG) | SF BENCHMARK (RANGE) |
|---|---|---|---|---|
| Critical Care Beds | 5,846 | 26,377 | 18,300 | 17,400 - 19,200 |
| General Medicine Beds * | 56,862 | 56,862 | 134,963 | 128,325 - 141,600 |
| Nursing Observation | 0 | 28,544 | 24,400 | 23,200 - 25,600 |
| Radiology | 5,555 | 6,621 | 13,200 | 12,000 - 14,400 |
| Cardiovascular | 7,038 | 12,060 | 11,400 | 10,000 - 12,800 |
| Surgery: Operating Rooms | 11,383 | 23,360 | 27,000 | 24,000 - 30,000 |
| Surgery: Cysto / Endo / GI | 2,052 | 2,504 | 2,700 | 2,400 - 3,000 |
| Surgery: Prep / Recovery / PACU | 2,686 | 9,056 | 15,750 | 14,000 - 17,500 |
| Emergency Department | 13,009 | 32,531 | 45,050 | 42,400 - 47,700 |
| Administration, Facilities, and Operations | 46,990 | 63,079 | 84,686 | 67,854 - 101,518 |
| Central Supply / Materials Management | 3,425 | 7,374 | 9,863 | 7,890 - 11,835 |
| Public Lobby | 1,764 | 2,689 | NA | |

* Excludes Nursing Observation

Name: MSMHC
Date: 18 NOVEMBER 2013
Project No.: 860423.000

PERKINS+WILL

CAGLEY & ASSOCIATES
CONSULTING STRUCTURAL ENGINEERS
6141 Executive Boulevard, Rockvillle, Maryland 20852
(301) 881-9050 Fax (301) 881-1125

# Memo

**To:** Derek Warr

**From:** Frank Malits

**Date:** 16 September 2013

**Re:** Medstar Southern Maryland Hospital

---

The following information is provided to support a cost estimating effort based on the latest conceptual drawings as prepared by Perkins + Will. The project, from a structural engineering perspective, is comprised of two distinct components:

- A West Addition, which is a 6-story addition located on the western side of the existing main hospital building. This addition houses an emergency department and associated clinical care spaces, one floor of patient rooms, and several shell floors.

- A South Addition, which is a 2-story addition located on the southern side of the existing main hospital building. This addition houses a new boiler room, loading dock area, and operating suites on the upper floor.

The architectural floor plans are conceptual in nature at this time. The information provided below assumes a structural bay arrangement on the order of 26 to 32 feet (square or rectangular), which is fairly common for this type of medical application.

No geotechnical information is available specifically intended for this development. A soils report that was produced for a single story addition on the campus allowed the use of spread footings at a very low bearing pressure of 2,000 psf. More substantial buildings on the campus are supported on foundation systems that are indicative of poor soils. For example, the east patient tower is supported by a mat foundation. As the project moves forward, more geotechnical study will be necessary. For the purposes of this memo, we have assumed that the lighter South Addition can be supported on spread footings, while the heavier West Addition will require a deep foundation system. An auger cast pile system has been assumed since it nicely addresses the dual foundation elevation condition described earlier, and eliminated the noise and vibration problems that would occur with a driven pile system. Auger cast piles are assumed to be 12" diameter with a 100 ton capacity per pile.

Steel framing systems were selected for this project because of their lighter weight compared to concrete systems, which is beneficial considering the poor soil conditions. Ample floor to floor height exists to allow the efficient use of the steel systems.

The structural systems selected for the floors provide the required strength and good performance for normal footfall vibration mitigation. They also provide a 2-hour fire rating such that applied fireproofing

systems will only be necessary for the steel beams, girders and columns. No fireproofing will be needed on the underside of the slabs.

Floor construction will consist of 3-1/4" lightweight concrete on 3" deep 18 gage galvanized composite floor decking (total slab thickness= 6-1/4"), reinforced with welded wire fabric. Floor systems will be supported by composite steel beams and girders. For beams, assume one ¾" diameter shear stud every foot of beam length. For girders, assume two studs every foot. Steel tonnage for primary members (including beams, girders, columns and lateral load elements) is expected to be on the order of 12 psf of steel per square foot of floor area.

In order to provide future flexibility and limit the extent of fireproofing, the roofs will be framed with the same construction as the floors, as described above. Steel tonnage for primary members (including beams, girders, columns and lateral load elements) is expected to be on the order of 12 psf of steel per square foot of floor area.

Lateral load systems will need to be incorporated into the floor plan as the architectural layouts become finalized. Braced frames are preferable for the West Addition. Either braced frames or fully welded moment resisting frames may be considered for the shorter South Addition.

## West Addition

To make way for the new work, an existing protruding element on the front of the building will need to be demolished. We do not have structural drawings of this area; however, a civil drawing clearly shows this area was a distinct 1-story addition to the main structure. As a result, it seems likely that this area can be readily demolished without significantly affecting structure to remain beyond.

The new structure will be six stories in total, including the Ground Level which will actually be below grade at this area of the site. The below-grade footprint is not as wide as the footprint contemplated above, such that foundations will occur at two levels, both below the Ground Floor (in the area one bay west of Grid AA) and First Floor slabs (remainder of the addition footprint). Sufficient area seems to exist to lay the excavation back, generally precluding the need for extensive sheeting and shoring systems. Some sheeting and shoring may be necessary if the Ground Floor construction is phased.

A 2" wide movement (expansion) joint is anticipated to separate the new building from the existing construction.

### Ground Floor Level

This level will be conventional slab on grade on compacted subgrade and drainage course. Slabs are expected to be 5" thick reinforced with welded wire fabric. Perimeter basement walls will be 14 inches thick reinforced concrete. There is no information available at this time concerning the depth of the ground water table to ascertain the impact (if any) of water on the temporary construction or permanent conditions.

Columns that are founded at this level will support five elevated floors and a roof. Individual columns are expected to be supported by a 6-pile cluster topped by a 9 foot square x 4 foot thick pile cap. Building code seismic requirements will cause all of the pile caps to be connected by 24" square grade beams.

### Level 1

The portion of this level that occurs over the Ground Floor Level will be composite steel floor framing as described above. The remaining area will be 5" thick slab on grade reinforced with welded wire fabric. A perimeter frost wall will be necessary along the perimeter of the slab on grade area.

Columns that are founded at this level will support four elevated floors and a roof. Individual columns are expected to be supported by a 5-pile cluster topped by an 8 foot square x 44" thick pile cap. Building code seismic requirements will cause all of the pile caps to be connected by 24" square grade beams.

Levels 2, 3, 4, 5 and Roof over Level 5

Steel composite floor framing as described above.

Impacts on Existing Building

Under all options being considered, a new staff elevator bank is to be constructed in the southwest corner of the existing building. This work is located partially in new construction, and partially within the existing building footprint. The elevator bank, elevator lobby, and a small adjacent space are located within the existing building footprint. This work will be somewhat complex structurally since it will bridge the movement joints separating the new work from the existing building. The following impacts are anticipated:

- A new concrete elevator pit will need to be created at the Ground Level, which will likely require underpinning of 3 or 4 adjacent existing columns.

- The existing steel floor framing at Level 1 will need to be altered to create the shaft for the two new elevators.

- The existing roof framing system (Level 2) is unknown at this time. At a minimum, the same alterations as at Level 1 will be necessary to create the new shaft. If the existing framing system is roof decking, additional work may be necessary to create a usable concrete floor surface for the elevator lobby and adjacent conference room space. Existing steel framing may need to be strengthened by cover plating to create the additional structural capacity to support concrete floor construction.

- The new elevator bank continues up as new construction above the existing roof elevation to serve Levels 3, 4 and 5. New floor construction will be created at these levels, plus a roof level and maybe a machine room level as well depending on the elevator type selected. At least four new steel columns located around the perimeter of this work, but within the existing building footprint, will be necessary to support the new loads. These columns will extend down through the existing building, to be supported on new foundation elements at the Ground Floor Level.

- Although complex, the amount of disturbed area in the existing building is limited, so there is no expectation of triggering any code-required seismic retrofits for the remainder of the existing building.

Another alternate solution being considered would create a large new area of floor space on top of the existing building at Level 2 (the existing roof level), for the area roughly bounded by Grids A2 and A8, and Grids AA and AC. The following impacts are anticipated:

- The existing roof framing system (Level 2) is unknown at this time. If the existing framing system is roof decking, additional work may be necessary to create a usable concrete floor surface for the new floor areas. Existing steel framing may need to be strengthened by cover plating to create the additional structural capacity to support concrete floor construction.

- A new steel roof structure would need to be constructed above (at Level 3) to create the newly enclosed space.

- Existing column and foundation sizes and conditions are not known at this time. It is not known if these elements possess sufficient capacity to support the new loads, or if strengthening will be necessary.

- The amount of disturbed area in this alternate is significant. The amount of mass that would be added to the existing building may be significant enough to trigger seismic analysis and retrofit of the existing building. Further analysis would be necessary.

**South Addition**

The new structure will be two stories in total, all occurring generally at or above grade due to the existing sloping site topography.

A 2" wide movement (expansion) joint is anticipated to separate the new building from the existing construction.

Ground Floor Level

This level will be conventional slab on grade on compacted subgrade and drainage course. Slabs are expected to be 5" thick reinforced with welded wire fabric, except at the boiler room expansion, where the slabs will be 6 inches thick. A perimeter frost wall will be necessary along the perimeter of the slab on grade area.

Columns at this area may be founded on shallow spread footings that are approximately 12 feet square by 2 feet deep.

Level 1 and Roof over Level 1

Steel composite floor framing will generally be as described above; however, add one inch of additional concrete thickness to the floor framing to provide additional mass for vibration damping at the surgical suites. Increase steel tonnage to 14 psf in this area.

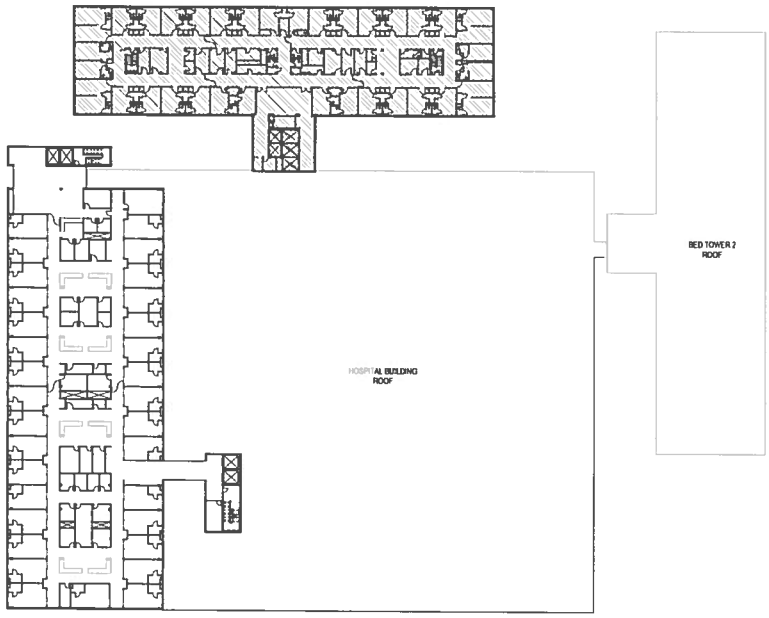


4 LEVEL 03
1/32" = 1'-0"

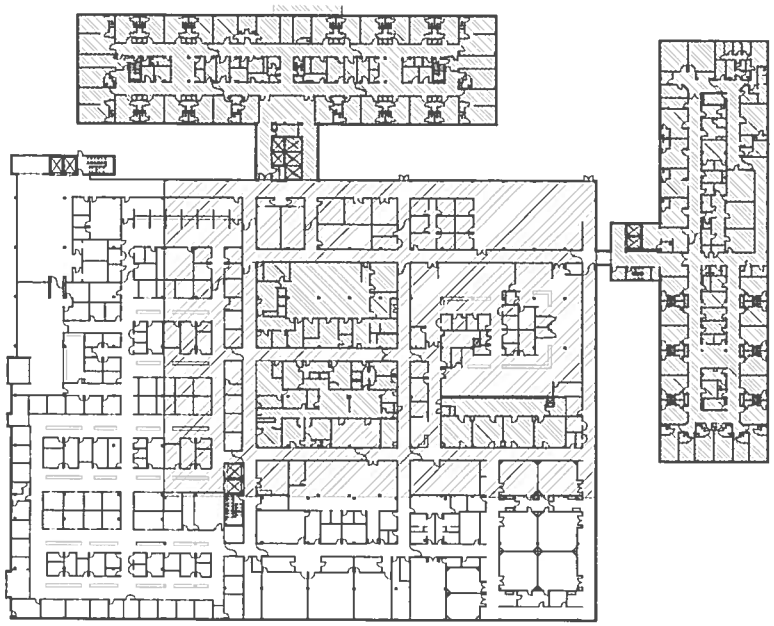

2 LEVEL 01
1/32" = 1'-0"

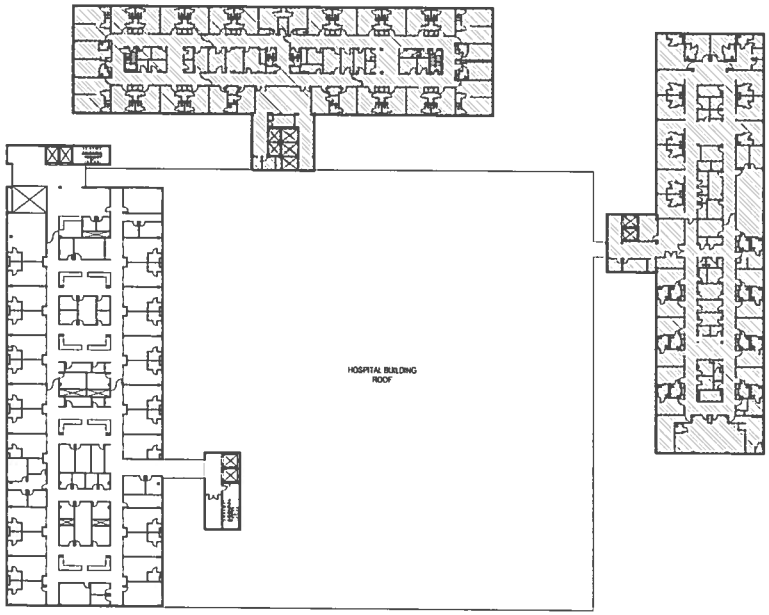


3 LEVEL 02
1/32" = 1'-0"

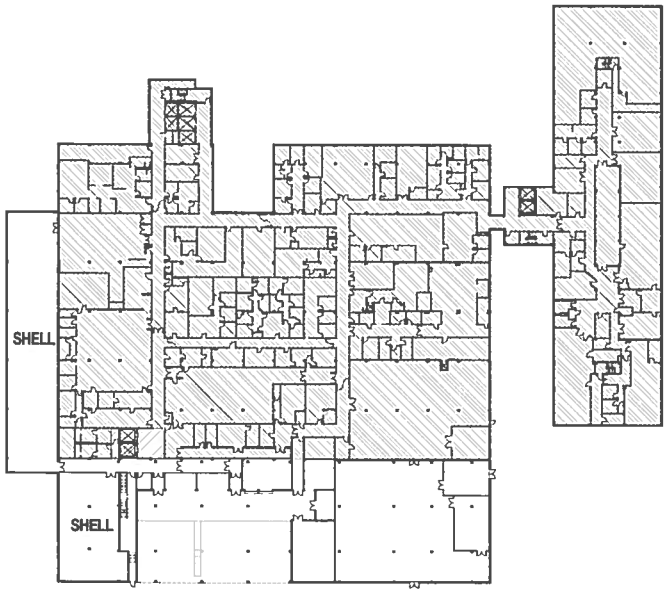


1 LEVEL 00
1/32" = 1'-0"

## LEGEND

- NO CHANGE (NIC)
- ALTERED BY RENOVATION
- NEW CONSTRUCTION (NO HATCH)

PERKINS + WILL

1250 24th St. NW
Suite 600
Washington, DC 20037
t 202.797.9200
f 202.223.1570
www.perkinswill.com

**MEDSTAR SOUTHERN MARYLAND HOSPITAL CENTER**

7503 Surratts Road
Clinton MD, 20735

Revisions

| NO | DESCR. | DATE |
|---|---|---|
| 1 | CDR - REV 1 | 11/04/13 |

Sheet Information

| | |
|---|---|
| Date | 11/04/2013 |
| Job Number | 5004.23.000 |
| Drawn | |
| Checked | |
| Approved | |

Title

**PROJECT SCOPE DIAGRAMS**

Sheet

**A04-10**

Copyright © 2013 Perkins+Will

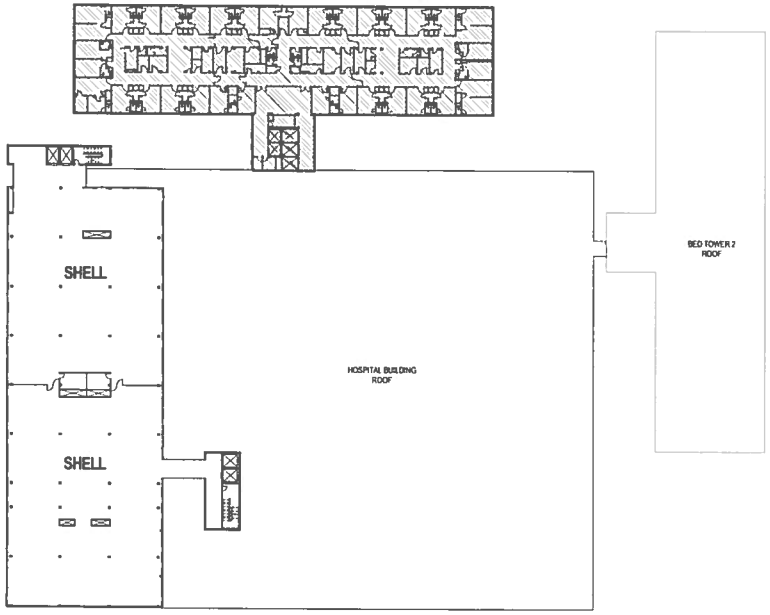


1 LEVEL 04
1/32" = 1'-0"

## LEGEND

- NO CHANGE (NIC)
- ALTERED BY RENOVATION
- NEW CONSTRUCTION (NO HATCH)

PERKINS + WILL

1250 24th St. NW
Suite 800
Washington, DC 20037
T 202 797 1000
F 202 223 1670
www.perkinswill.com

**MEDSTAR SOUTHERN MARYLAND HOSPITAL CENTER**

7503 Surratts Road
Clinton MD, 20735

Revisions

| NO | ISSUE | DATE |
|---|---|---|
| | CON REV | 11/04/13 |

Sheet Information

Date 11/04/2013
Job Number 8884.22.000
Drawn
Checked
Approved

Title

**PROJECT SCOPE DIAGRAMS**

Sheet

**A04-11**

Copyright © 2013 Perkins+Will

## REVISED PROJECT BUDGET

### A. Use of Funds

1. Capital Costs:

| | | |
|---|---|---|
| a. | New Construction | |
| (1) | Building | $ 56,846,021 |
| (2) | Fixed Equipment (not included in construction) | 8,090,000 |
| (3) | Land Purchase | 0 |
| (4) | Site Preparation | 7,313,002 |
| (5) | Architect/Engineering Fees | 6,135,902 |
| (6) | Permits, (Building, Utilities, Etc) | 288,750 |
| **SUBTOTAL** | | $ 78,673,675 |
| b. | Renovations | |
| (1) | Building | $ 12,480,685 |
| (2) | Fixed Equipment (not included in construction) | 4,045,000 |
| (3) | Architect/Engineering Fees | 1,248,068 |
| (4) | Permits, (Building, Utilities, Etc.) | 96,250 |
| **SUBTOTAL** | | $ 17,870,003 |
| c. | Other Capital Costs | |
| (1) | Major Movable Equipment | 7,225,000 |
| (2) | Minor Movable Equipment | 1,850,000 |
| (3) | Contingencies | 3,691,985 |
| (4) | Other (Specify) | 0 |
| **TOTAL CURRENT CAPITAL COSTS** (a - c) | | $ 109,310,663 |
| d. | Non Current Capital Cost | |
| (1) | Interest (Gross) | $ 10,912,046 |
| (2) | Inflation (state all assumptions, Including time period and rate) | $ 9,729,969 |
| **TOTAL PROPOSED CAPITAL COSTS** (a - d) | | $ 129,952,678 |

2. Financing Cost and Other Cash Requirements:

| | | |
|---|---|---|
| a. | Loan Placement Fees | $ 1,100,000 |
| b. | Bond Discount | 0 |
| c. | Legal Fees (CON Related) | 500,000 |
| d. | Legal Fees (Other) | 0 |
| e. | Printing | 10,000 |
| f. | Consultant Fees | |
| | CON Application Assistance | 150,000 |
| | Other (Specify) | 0 |
| g. | Liquidation of Existing Debt | 0 |
| h. | Debt Service Reserve Fund | 0 |
| i. | Principal Amortization Reserve Fund | 0 |
| j. | Other (Specify) | 0 |
| | **TOTAL (a - j)** | $ 1,760,000 |

3. Working Capital Startup Costs $ _____

**TOTAL USES OF FUNDS (1 - 3)** **$ 131,712,678**

**B. Sources of Funds for Project:**

| | | |
|---|---|---|
| 1. | Cash | 37,432,204 |
| 2. | Pledges: Gross _____, less allowance for uncollectables _____ = Net | 0 |
| 3. | Gifts, bequests | 5,000,000 |
| 4. | Interest income (gross) | 0 |
| 5. | Authorized Bonds | 89,280,474 |
| 6. | Mortgage | 0 |
| 7. | Working capital loans | 0 |
| 8. | Grants or Appropriation | |
| | (a) Federal | 0 |
| | (b) State | 0 |
| | (c) Local | 0 |
| 9. | Other (Specify) | 0 |

**TOTAL SOURCES OF FUNDS (1-9)** **$ 131,712,678**

Lease Costs:

| | | | |
|---|---|---|---|
| a. Land | $_____ | x _____ | = $_____ |
| b. Building | $_____ | x _____ | = $_____ |
| c. Major Movable Equipment | $_____ | x _____ | = $_____ |
| d. Minor Movable Equipment | $_____ | x _____ | = $_____ |
| e. Other (Specify) | $_____ | x _____ | = $_____ |

| MedStar Southern Maryland Hospital Center<br>Policy and Procedure Manual<br>Department of Finance | | Subject: Average Estimated Charges<br><br>Number: | |
|---|---|---|---|
| **Original Date: 9/13** | **Review Date(s):** | **Revision Date(s): 11/13** | **Page 1 of 1** |
| **Departments Involved: Finance, Admitting, Collections, Patient Accounts, Marketing, Outpatient Services** | | | |

**PURPOSE:**

The purpose of this policy is to define the procedure for informing prospective patients of the estimated average charge for an admission and /or procedure at MedStar Southern Maryland Hospital Center.

**POLICY:** Hospital rates in the State of Maryland are regulated by the Health Services Cost Commission (HSCRC). The HSCRC sets rates for all payers including Medicare and Medicaid. Patients are informed of estimated average charges for common inpatient and outpatient services at MedStar Southern Maryland Hospital Center via the hospital's website. These charges are estimates and may change without notice. The actual cost of care may be higher or lower depending on the patient's unique circumstances, such as length of stay in the hospital and complexity of their medical condition. These charges are updated quarterly

**PROCEDURE:**

A list of common inpatient and outpatient procedures and charges are maintained on the hospital's website and can be accessed through the following: https://www.medstarhealth.org/southern-maryland/Pages/About-Us/Estimated-Average-Charges-for-Common-Procedures.aspx

1. This information is reviewed and updated quarterly and is based on the average charges for the prior twelve months.
2. Patients with questions about this information are also directed to contact the hospital's business office at (301) 877-4262 during normal business hours (8:00AM to 4:30PM).
   a. A trained business office representative will facilitate response to the patient's inquiry. The Director of Patient Accounts is also available should the representative need further assistance.
   b. Information requested will be responded to within 24-hours of contact. The intent is to respond immediately, but by no less than the end of the next business day.
   c. A current list will be available in writing upon request and can be sent as an attachment to an e-mail.
   d. If desired, patients may also request the information to be mailed via US postal service.
3. Staff handling inquiries will be trained on the policy and procedure, and on how to manage patient's questions about average estimated charges.

| MedStar Southern Maryland Hospital Center<br>Policy and Procedure Manual<br>Department of Collections | | Subject: Addendum to<br>MedStar Southern Maryland Hospital Center<br>Financial Assistance Policy<br><br>Number: | |
|---|---|---|---|
| Original Date:<br>11/13 | Review Date(s): | Revision Date(s): | Page 1 of 1 |
| Departments Involved: Collections, Out-Patient Services, Emergency Department, Admitting, Finance | | | |

**PURPOSE:** This document will act as a supplement to, and in support of the MedStar Southern Maryland Hospital Center, Financial Assistance Policy and Procedure. It is hereby stated, and from henceforth understood that the following will be adopted:

**POLICY:** As one of the regions's leading not –for profit healthcare systems. Medstar Health is committed to ensuring that uninsured patients within the communities we serve who lack financial resources have access to necessary hospital services. In an effort to properly inform our patient population (both In and Out Patient) of the Hospitals financial assistance options, we post annual notices of such assistance in the Enquirer-Gazette, along with posting the same notice in all registration areas. (Admitting, Emergency, and Out Patients Services). We also include such disclosures in the Hospital Patient Information Sheet. All postings for every placement mentioned above are printed in both English and Spanish.

**6. METHOD FOR APPLYING FOR FINANCIAL ASSISTANCE: INCOME AND ASSET DETERMINATION**

**ADDENDUM:**

6.1.4 – After being advised of the individual, family annual income and size demographics, probable eligibility can be determined, within two (2) business days.

6.1.5 – Determining probable eligibility within the 2 day turn around gives a potential individual, family seeking financial assistance an idea fairly quickly as to whether the patient will be able to obtain timely medical services.

**PROGRAM EXCLUSION**

**ADDENDUM:**

1.4 – The process to determine if an individual or family is underinsured will consist of that individual or family providing annual income and size demographics, which will be analyzed to confirm if further assistance is warranted.

**NOTICE OF APPOINTMENT**
**NOTICE TO CREDITORS**
**NOTICE TO UNKNOWN HEIRS**

Estate No. 93504

TO ALL PERSONS INTERESTED IN THE ESTATE OF CAROLYN J. BEALE

Notice is given that LAVESE T. BRILEY, 8624 GLENARDEN PKWY., GLENARDEN, MD 20706 was on MAY 10, 2013 appointed personal representative of the estate of CAROLYN J. BEALE who died on APRIL 4, 2013 with a will.

Further information can be obtained by reviewing the estate file in the office of the Register of Wills or by contacting the personal representative or the attorney.

All persons having any objection to the appointment (or to the probate of the decedent's will) shall file their objections with the Register of Wills on or before the 10TH day of NOVEMBER, 2013. (6 months

**NOTICE OF APPOINTMENT**
**NOTICE TO CREDITORS**
**NOTICE TO UNKNOWN HEIRS**

Estate No. 87740

TO ALL PERSONS INTERESTED IN THE ESTATE OF ALFRED COOPER

Notice is given that PERRY J. BECKER, 14300 GALLANT FOX LANE, SUITE 218, BOWIE, MD 20715 was on MAY 23, 2013 appointed personal representative of the estate of ALFRED COOPER who died on MARCH 15, 2011 with a will.

Further information can be obtained by reviewing the estate file in the office of the Register of Wills or by contacting the personal representative or the attorney.

All persons having any objection to the appointment (or to the probate of the decedent's will) shall file their objections with the Register of Wills on or before the 23RD day of NOVEMBER, 2013. (6 months

**Southern Maryland Hospital Center complies with the provisions of the Civil Rights Act of 1964 and all requirements imposed pursuant thereto, to the end that no person shall, on the basis of race, color or national origin, or sexual orientation be excluded from participation in, be denied benefits of, or otherwise be subject to discrimination in the provision of any care or services.**

MedStar Southern Maryland Hospital Center

7503 Surratts Rd., Clinton, MD 20735 • 301-868-8000

6661 (6-6)

**MEDICAL FINANCIAL ASSISTANCE POLICY**

**Southern Maryland Hospital Center provides partial or complete financial assistance for certain patients who do not qualify for Medicare or Medicaid and are not covered by health insurance. Patients who need financially-assisted medical care may request it at the time of admission and should be prepared to demonstrate their financial condition.**

**POLÍTICA MÉDICA DE LA AYUDA FINANCIERA**

**Southern Maryland Hospital Center proporciona la ayuda financiera parcial o completa para ciertos pacientes que no califiquen para Seguro de enfermedad o Medicaid y no sean cubiertos por seguro médico. Los pacientes que necesitan asistencia médica financiero-asistida pueden solicitarla a la hora de la admisión y deben ser preparados para demostrar su condición financiera.**

MedStar Southern Maryland Hospital Center

7503 Surratts Rd., Clinton, MD 20735 • 301-868-8000

6662 (6-6

## MEDICAL FINANCIAL ASSISTANCE POLICY

MedStar Southern Maryland Hospital Center provides partial or complete financial assistance for certain patients who do not qualify for Medicare or Medicaid and are not covered by health insurance. Patients who need financially-assisted medical care may request it at the time of admission and should be prepared to demonstrate their financial condition.

## POLITICA MEDICA DE LA AYUDA FINANCIERA

MedStar Southern Maryland Hospital Center proporciona la ayuda financiera parcial o completa para ciertos pacientes que no califiquen para Seguro de enfermedad o Medicaid y no sean cubiertos por seguro médico. Los pacientes que necesitan asistencia médica financiera asistida pueden solicitarla a la hora de la admisión y deben ser preparados para demostrar su condición financiera.

MedStar Southern Maryland Hospital Center

MedStar Southern Maryland Hospital Center

P.O. Box 735
Clinton, MD 20735
301-877-5586 **PHONE**
**medstarsouthernmaryland.org**

# HOSPITAL PATIENT INFORMATION SHEET

**Hospital Financial Assistance Policy**

MedStar Southern Maryland Hospital Center is committed to ensuring that uninsured patients within its service area who lack financial resources have access to medically necessary hospital services. If you are unable to pay for medical care, have no other insurance options or sources of payment including Medical Assistance, litigation or third-party liability, you may qualify for **Free or Reduced Cost Medically Necessary Care.**

MedStar Southern Maryland Hospital Center meets or exceeds the legal requirements by providing financial assistance to those individuals in households below 200% of the federal poverty level and reduced cost-care up to 400% of the federal poverty level.

**Patients' Rights**

MedStar Southern Maryland Hospital Center will work with their uninsured patients to gain an understanding of each patient's financial resources.

- They will provide assistance with enrollment in publicly-funded entitlement programs (e.g. Medicaid) or other considerations of funding that may be available from other charitable organizations.
- If you do not qualify for Medical Assistance, or financial assistance, you may be eligible for an extended payment plan for your hospital medical bills.
- If you believe you have been wrongfully referred to a collection agency, you have the right to contact the hospital to request assistance. (See contact information below).

**Patients' Obligations**

MedStar Southern Maryland Hospital believes that its patients have personal responsibilities related to the financial aspects of their healthcare needs. Our patients are expected to:

- Cooperate at all times by providing complete and accurate insurance and financial information.
- Provide requested data to complete Medicaid applications in a timely manner.
- Maintain compliance with established payment plan terms.
- Notify us timely at the number listed below of any changes in circumstances.

**Contacts:**

Call 301-877-4262 with questions concerning:

- Your hospital bill
- Your rights and obligations with regards to your hospital bill
- How to apply for Medicaid
- How to apply for free or reduced care

**For information about Maryland Medical Assistance**

Contact your local Department of Social Services
1-800-332-6347 TTY 1-800-925-4434
Or visit: www.dhr.stat.md.us

**Physician charges are not included in hospitals bills and are billed separately.**

*Knowledge and Compassion*
***Focused on You***

MedStar Southern Maryland Hospital Center

P.O. Box 735
Clinton, MD 20735
301-877-5586 **PHONE**
**medstarsouthernmaryland.org**

# HOJA DE LA INFORMACIÓN DEL INTERNO DE MARYLAND

**Política de la ayuda financiera del hospital**

MedStar Southern Maryland Hospital Center está confiado a asegurarse de que los pacientes sin seguro dentro de su área de servicio que carecen recursos financieros tienen acceso a los servicios médicamente necesarios del hospital. Si usted no puede pagar asistencia médica, no tenga ninguna otra opción del seguro o las fuentes del pago incluyendo la ayuda médica, el pleito o la responsabilidad de tercera persona, **usted puede calificar para el cuidado médicamente necesario libre o reducido del coste.**

MedStar Southern Maryland Hospital Center resuelve o excede los requisitos legales proporcionando ayuda financiera a esos individuos en casas debajo de 200% del nivel de pobreza federal y del coste-cuidado reducido hasta el 400% del nivel de pobreza federal.

**Las derechas del pacientes**

MedStar Southern Maryland Hospital Center trabajará con sus pacientes sin seguro para ganar una comprensión de los recursos financieros de cada paciente.

- Proveerán de ayuda la inscripción en programas público-financiados del derecho (e.g. Medicaid) u otras consideraciones del financiamiento que pueden estar disponibles de otras organizaciones caritativas.
- Si usted no califica para la ayuda médica, o la ayuda financiera, usted puede ser elegible para un plan extendido del pago para sus cuentas médicas del hospital.
- Si usted cree ilícito le ban referido una agencia de colección, usted tiene la derecha de entrar en contacto con el hospital para solicitar ayuda. (Véase la información del contacto abajo).

**Obligaciones de los pacientes**

MedStar Southern Maryland Hospital Center cree que sus pacientes tienen responsabilidades personales relacionadas con los aspectos financieros de sus necesidades del healthcare. Nuestros pacientes esperan:

- Coopere siempre proporcionando seguro completo y exacto y la información financiera.
- Proporcione los datos solicitados para terminar los usos de Medicaid de una manera oportuna.
- Mantenga la conformidad con terminos establecidos del plan del pago.
- Notifiqúenos oportunos en el número enumerado abajo de cualquier cambio en circunstancias.

**Contacto:**

Llamada 301-877-4262 con preguntas respect a:

- Su cuenta del hospital
- Las sus derechas y obligaciones en lo que respecta a su hospital manda la cuenta
- Cómo solicitar Maryland Medicaid
- Cómo solicitar cuidado libre o reducido

**Para la información sobre Maryland Ayuda Médica**

Entre en contacto con su departamento local de servicios sociales:
1-800-332-6347 TTY 1-800-925-4434
O visitor: **www.dhr.state.md.us**

**Las cargas del médico no se incluyen en cuentas de los hospitales y se mandan la cuenta por separado.**

DEPARTMENT OF HEALTH & HUMAN SERVICES
Centers for Medicare & Medicaid Services
Philadelphia Regional Office
Suite 216, The Public Ledger Building
150 S. Independence Mall, West
Philadelphia, PA 19106-3413

**Northeast Division of Survey & Certification**

October 31, 2013

Mr. Michael Chiaramonte, Administrator
Medstar Southern Maryland Hospital Center
7503 Surratts Road
Clinton, MD 20735

Dear Mr. Chiaramonte:

Re: CMS Certification Number: **210062**

**IMPORTANT NOTICE - PLEASE READ CAREFULLY**

Based on the results of the Maryland Office of Health Care Quality survey that ended on October 8, 2013, we find that **Medstar Southern Maryland Hospital Center** is now in compliance with all of the Medicare Conditions of Participation.

Medstar Southern Maryland Hospital Center can again be recognized as meeting Medicare requirements by virtue of its accreditation by the Joint Commission (JC). The hospital's "deemed status" has been restored as of the date of this letter.

We appreciate your efforts and the steps taken to correct the Medicare deficiencies cited by the Maryland Office of Health Care Quality. We thank you for your cooperation, and look forward to working with you on a continuing basis in the administration of the Medicare program.

Sincerely,

Pat McNeal
Principal State Representative
Certification and Enforcement Branch

# MEDSTAR SOUTHERN MARYLAND HOSPITAL EMERGENCY DEPT.

Existing Conditions + Recommendations Report

SEPTEMBER 2013

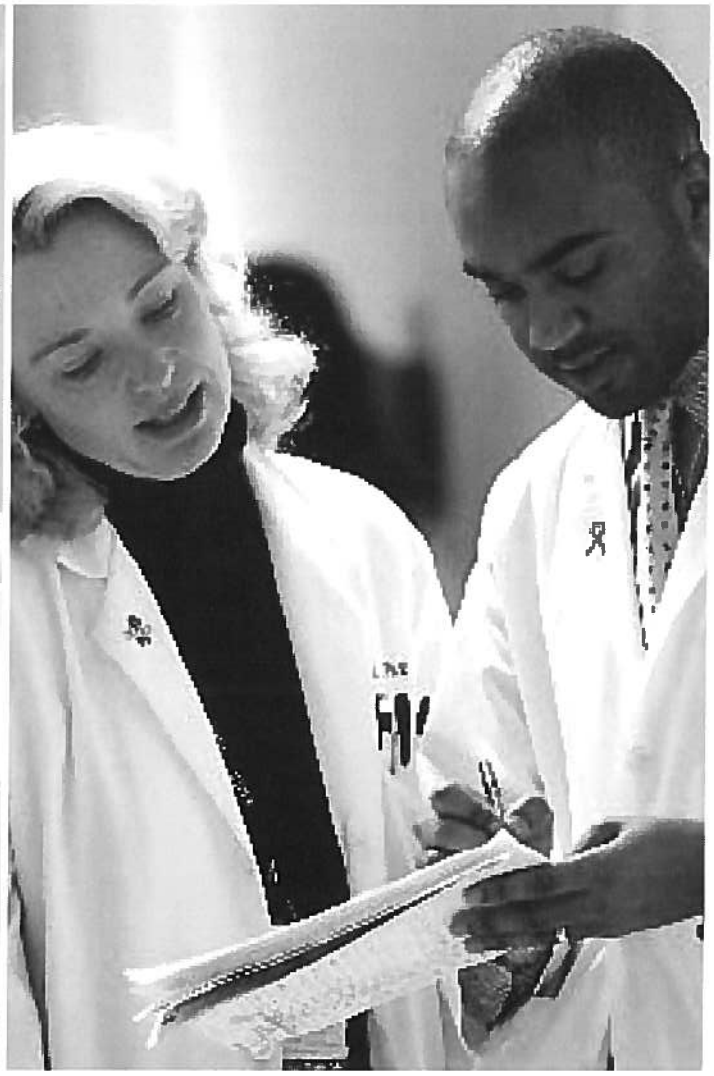

PERKINS+WILL

# TABLE OF CONTENTS

01. ED Executive Summary

02. Existing Conditions

03. Recommendations

04. Future ED Workflow

05. ED Projections / Space Needs

# SECTION 01.
# ED EXECUTIVE SUMMARY

## ED EXECUTIVE SUMMARY

The ED is a large contributor to hospital operations and financial growth. Patient expectations are increasing, placing significant emphasis on patient satisfaction and customer service. This is difficult to achieve with limited space and resources, increased census, and rising costs. MedStar Southern Maryland has done tremendous work in regards to providing care and service for their patients within the constraints of space and operations. Dr. McDonald, Donald Charlson and the ED team are continuously striving to try new ideas and ways to improve throughput and customer satisfaction.

The information within this document is taken from observations made by the Perkins+Will team and interviews with the Emergency Department Staff and Physicians. We have provided documentation on the existing ED, issues/challenges, and recommendations. Many of the changes presented in the recommendations section can be accomplished in the present location while others would be better accomplished with an ED renovation and/or expansion. The following are just a few of the recommendations discussed that would make an impact on the ED.

1. Consider evaluating the Team Triage/RME/Fast-Track concept and registration process in the new ED. This area is definitely a team oriented environment and needs to enhance the patient's experience. Mid-level providers or a physician can be assigned to the team. Observed waiting area would be part of this concept for those patients awaiting results of lab/x-ray or those emergent patients being discharged with delays for a ride. By mapping the process with existing and future state maps, a new process could be developed to improve patient flow and satisfaction and decrease patient turnaround time. Many patients could be kept vertical in a "Treat and Street" process without occupying an ED treatment bed. This would provide space to those that are truly emergencies in the ED and decrease bed requirements. Presently the front-end process is causing an average door to provider time of 60 minutes. Reduction in the turnaround time could reduce the number of beds needed in the ED.

2. Maintaining a safe environment is of paramount importance for patients and staff. Violence within the Emergency Department has increased and a security presence within the ED Lobby would enhance the perception of the ED and possibly prevent incidents.

3. The ED staff needs to be able to work well within their areas. enhancing the Nursing Stations and providing adequate ED Physician bases within that space would allow for a better work environment. At present, the E1 nursing station is noisy and crowded and can cause a decrease in staffing and operational efficiencies.

4. In the new design, it is of paramount importance for the staff and patient populations to have the ability to flex freely throughout the ED. Trying to

connect the different areas of the ED would provide this flexibility. This flexing, or reassignment of use, may occur frequently depending on daily or even hourly workload demands. Sight and communication lines would be enhanced. Barriers would be eliminated and open work areas would be established that encourage communication among staff. At present, the areas are compartmentalized and cause a decrease in staffing and operational efficiencies.

5. Some of the ED rooms are undersized for their use. The rooms need to be designed to provide care and treatment for all acuities, except Trauma, and improve patient and staff safety.

6. Staff is adapting to a shortage of support space. Providing access to supplies/medications/linens closer to the point of care or having appropriately stocked automated systems will improve staff efficiency and productivity.

7. Secondary Treatment Areas should support and keep the ED Primary Treatment Areas' turnaround time as low as possible. It would be prudent to investigate utilization of a true Clinical Decision Unit (CDU) with set criteria for those patients presenting to this area. It will also be important to map the existing process for ED admissions which includes the hospital's program and develop a future state with the ED and Inpatient services that could incorporate bridge orders from the ED physician.

8. Evaluate the current use of the Behavioral Health rooms. At this time, there is a backlog of behavioral health patients needing mental health evaluation and admission. These patients remain in the main ED treatment rooms causing an issue for security to maintain surveillance of multiple patients tying up emergent beds.

   Behavioral patients could be handled in one of two ways:

   a. Behavioral patients continue to be treated within the main ED where they are evaluated and medically cleared, and then await disposition.

   b. Behavioral patients are seen in a dedicated area within the ED where they can be evaluated, medically cleared, await transfer to the appropriate facility, or are discharged. This model minimizes the time and staff required to care for the behavioral patients, as they are all located in one area. This is the model that is chosen by the majority of EDs nationwide.

In conclusion, there are many ED issues that can be resolved in the short term to improve operational efficiencies, patient/staff safety, and patient experience

and satisfaction. However, in the long term, it will be advantageous for the ED to be renovated and expanded. This would create a clinical environment that would be capable of adapting to the evolving needs and programs at the hospital. The ED could be designed to provide services for a wide range of clinical needs in an efficacious manner, not only for today's needs but also for tomorrow's emerging medical practices. For potential expansion needs, the calculations on the following pages have been developed.

*Respectfully submitted by:* *Marvina Williams RNBSN, Perkins+Will*

PERKINS+WILL

# SECTION 02.
# EXISTING CONDITIONS

## MEDSTAR SOUTHERN MARYLAND HOSPITAL EMERGENCY DEPARTMENT

*The information in this section is taken from observations made by the Perkins+Will team and interviews with the Emergency Department Staff and Physicians.*

### GENERAL INFO

MedStar Southern Maryland Hospital Emergency Department is designated as a Chest Pain Center and Stroke Center, not a designated Trauma Center.

- The Emergency Department saw a total of 66,455 patients in 2012, (5538/month, 182/day)
- Total ED Admissions for 2012: 13,964 (21% admit rate)
- ALOS: Admitted: 6.22 hrs
- Non-Admit: 2.55 hrs
- Pediatric ED census: 9062
- Pediatric ED Admissions for 2012: 126

The ED has 28 acute patient positions for higher acuity patients and 11 Fast Track positions for lower acuity patients. They have a total of 39 patient treatment positions.

The acute patient positions are in the following areas. One area of the ED is considered **E1.** It has 14 patient positions. They are 1A, 1B, 2 – 11, 12A and 12B. The two semi-private rooms in this area are the Trauma/Resuscitation rooms. The other rooms in this area are private.

There is one large open room that has **5 bays** separated by curtains for acuity level 3 and those waiting admission. These are patient position numbers 14 – 18.

**E2** has 9 patient positions for acuity 3 and lower. These are rooms 19 – 25 and patient room 26A, 26B.

The 11 Fast Track patient positions are in the area they call the **Lounge** and it has 11 treatment chairs for the lower acuities 4 and 5.

There is one triage room with the ability to open another triage space when the need arises.

ENA staffing guidelines are used for their staffing model. The staff is assigned by color coded teams.

1. **Red Team** consists of 2 RN's and 1 Tech and has rooms 1A, 1B. 2, 3, 4, 5, 6.
2. **Aqua Team** consists of 2 RN's and 1 Tech and has rooms 7, 8, 9, 10, 11, 12A, 12B.
3. **Blue Team** consists of 1 RN and 1 Tech and has beds 14, 15, 16, 17, 18.
4. **Green Team** consists of 1 RN and 1 Tech and has rooms 19, 20, 21, 22, 23
5. **Yellow Team** consists of 1 RN and 1 Tech and has rooms 24, 25, 26A, 26B.
6. **Magenta Team** consists of 1-2 RN's and 1 Tech and has L2 – L12.

They also have 1 RN float from 11 a.m. – 11 p.m. within the E1 area. Not all areas are open 24 hours/day. The Lounge area opens 10 a.m. – 10 p.m., but sometimes will remain open until 3 a.m. due to high census. This area utilizes a Midlevel Provider. They try to staff a (PIT), Provider in Triage between 3 p.m. – 10 p.m. that allows for an advanced triage system to help turn around lower acuity patients in the ED.

The ED goes on diversion if necessary. **Code Yellow Diversion:** they are overwhelmed, **Code Red Diversion:** there are no telemetry or critical care beds and **EMS Diversion**: where the EMS cannot get their patient on a treatment stretcher within 20-30 mins of arriving to the ED. Their busiest days are Sunday and Monday.

The ED uses McKesson for their patient tracking and computer documentation which they went live on January 15th, 2013. They are still adjusting to documenting by computer and they feel it takes them longer in triage with the computer. The ED physicians now use scribes due to the computer system.

They have the PAC's system for Medical Imaging in the ED.

The Cath lab is located in close proximity to the ED. The OR is on the same floor. The laboratory is down the hall and there is one point to point pneumatic tube station within the ED. Medical Imaging is adjacent to the ED with a 64 slice CT that is within the main ED.

Existing operational and space issues are listed on the following pages.

## EXISTING FACILITY CONDITIONS

### **ED ENTRANCE:** OVERVIEW

There is one ambulatory entrance into the ED. The ambulances have a separate entrance into E1 where the Resuscitation Rooms are located.

The ambulatory entrance is used by ED patients, non-ED patients, and visitors. The main entrance to the hospital closes at 9 p.m. and then the ED is where visitors must enter for access to the inpatient units.

Once through the ambulatory entrance, you must walk through the lobby to reach the Intake Nurse that is sitting near the registration desk. The Intake Nurse has a computer on wheels where the nurse can enter data on the patient. There is a quick registrar (T-reg) desk that is co-located adjacent to another registration desk where they are able to obtain full registration or update registration if time allows. This second registration desk can also serve as a quick registration area if census is high. There is a Triage/EKG room adjacent to the registration area.

If it is after hours and you do not need ED services, but you need to visit an inpatient floor, the ED will need to notify security so that you can enter through the ED to the main hospital. If you are seeking care in the ED, you will register at the quick registration desk.

Ambulance Entrance: There are 4 ambulance bays in the ambulance parking lot. These bays have to be backed in by the EMS trucks. They have an EMS liaison at the hospital and the EMS prefers to have a circular covered drive.

***Issues:***

* *At the entrance, space is a problem for those entering the ED and those waiting in line to see the registration staff.*
* *Security is not visible. There is no designated area within the lobby for them.*
* *All inpatient visitors after hours must walk through the ED to obtain access to the hospital.*
* *Ambulances must back in to the ambulance space.*

### **LOBBY:** OVERVIEW

The present ED lobby is a wide open circular space. The chairs are set up in an auditorium fashion facing the triage staff and the registrars. There are approximately 42 seats in the Lobby. This provides good visibility by the ED staff, but no privacy for the patients registering. The lobby is allocated for patients waiting to be seen by triage and waiting for a treatment space. All acuities are mixed within the lobby. The patients must stand in line or sit in a lobby chair to be registered and nurse intake done. If the Triage room is not available, the patient will sit in a lobby chair. Once triage is available, the staff

calls out the patient's name. The Charge Nurse and Team Leader for E2 assign patient treatment positions. They need to be close to a computer and they use a spectra-link phone.

There is no Patient Representative program assigned in the ED. There is no bereavement room in the ED.

There is a triage room adjacent to the Intake nurse and another area across the lobby that they use for triage when busy. Co-pay collection is done at bedside. The PAS staff state that if a doctor has been assigned a patient then they know the MSE has been done and they can now ask for the co-pay. There is no Financial Counselor located in the ED. The lobby restrooms are near the entrance.

Hospital Security is located in the basement of the hospital. The ED staff state they have a large number of incidents within the ED and Lobby area. They have a police officer in the main ED 7 p.m. – 5 a.m. Thursday through Monday, but no police presence on Tuesday and Wednesday.

***Issues:***

* *Lack of separation in waiting rooms of the higher acuity patient from the lower acuity patient may create patient misunderstandings.*
* *Patients must stand in line waiting to be seen by the intake nurse and quick registration.*
* *The chairs are situated so that they directly look at the staff and there is no off stage areas for staff.*
* *The area does not allow for privacy at registration.*
* *No Financial Counselor available in the ED.*
* *No designated play area for pediatrics patients in lobby*
* *There is no bereavement room for family*
* *Security has no major presence or visibility in the Lobby.*

## **RECEPTION/REGISTRATION AREA, GREETER DESK, TRIAGE:** OVERVIEW

Patients and visitors go to the reception intake/registration desks which are in an open area near the back of the lobby upon entering into the ED ambulatory entrance. The registration area is staffed by Patient Access Services or PAS. There are two open registration desks, plus the intake nurse with the mobile workstation adjacent to the registration area and a Triage/EKG room with a triage nurse. There is another triage space across the lobby when census is high, but it is not located within the lobby and is in an open alcove area.

There is a visitation policy of 2 people per patient. No visitation badges were noted. Visitor badges usually consist of room number and date only. When staffing is available they will have an ED Tech in triage to function as a runner and do EKG's. They are stationed in the triage room. The patients walk into the Lobby and are asked to stand behind a line on the floor until they are motioned to come up to Quick registration or the Intake Nurse. The intake nurse will talk to the patient to see if they are a walking critical or a walking wounded and refer patient to the quick registration desk while he/she enters the patient complaint on their mobile computer. The quick registration consists of name, chief complaint, PCP, and signing an electronic consent for treatment. If a patient is a walking critical, the ED tech or nurse will escort the patient back into a main ED treatment room and bedside registration is done. For example, Chest Pain would go to E1. If non-acute and a bed is available, quick registration is done and the patient is sent back to an available bed. Bedside registration will then complete the registration process once the patient is assigned a treatment space. The E2 Team Leader assigns rooms until 3 a.m. for those meeting criteria for E2. If non-acute and a bed is not available, the Registration staff will perform a quick registration of the patient and then the second registration area will do a complete registration and ask the patient to wait in the Lobby for a triage nurse.

The ESI level 5 acuity system is used in triage. Specific protocols have been set up for certain acuities, i.e. chest pain. The high acuity patients, level 1 & 2, are sent straight back to the main ED treatment rooms. ED hall stretchers are utilized on a routine basis in E1. Usually acuity 3, 4, & 5 are seen in triage. Acuity 3 will be sent back to a treatment space in the main ED when they have been assessed by triage, unless there is no room available. In Triage, many of the low acuity patients, such as 4's and 5's, are treated in the "Lounge" area, and never have to be sent to the main ED treatment rooms. The ED presently is developing a new way to handle triage in order to improve turnaround times and patient satisfaction.

The ED triage staff will perform triage in one of the two triage areas where vital signs and history are taken. The Triage/EKG room within the lobby is able to handle wheelchair patients and has scales for patient weight. The second triage area is small and open and unable to handle wheelchair patients or patient weight. Many times patients that are being triaged in the larger room are interrupted by another staff member taking a patient weight.

There is PAS staff within areas of the main ED for bedside registration. As previously stated, a financial counselor function is not available in the ED.

The button to allow visitors and patients access to the ED is located within the reception/registration desk areas.

*Issues:*

* *The Registration and ED Triage and Intake staff are out in the main lobby with no enclosure. Staff feels the area is too open and have had concerns about safety.*
* *There is no privacy for patients being registered and it is hard to control other patients that interrupt the staff.*
* *There is no area for patients to sit while giving registration information.*
* *Quick registration should be more streamlined.*
* *A long line forms for patients needing to be assessed by the Intake Nurse and many have a hard time standing.*
* *Limited space in second Triage area for wheelchairs to fit through area without difficulty*
* *Triage work area does not have adequate space for documentation and support.*
* *There is lack of privacy in the Triage work area if an EKG or weight is needed on another patient. This creates confidentiality and noise control issues.*
* *If no tech is available in Triage, nurses must leave area to bring patients back.*

****Please Note: Triage is one area that the patient process is being evaluated presently for better patient flow.**

## CLINICAL AREAS

### LOUNGE (L2-L12): OVERVIEW

The ED utilizes an old waiting room area for the L2 – L12 patients. These patients are lower acuity patients such as ESI acuity 4 and 5. This area is handled by the Magenta Team. This area is open from 10 a.m. – 10 p.m. but can remain open until 3 a.m. if necessary. It has chairs and Barco loungers for the patients. During the time it is open, there is 1-2 RN's, and 1 tech plus the Midlevel Provider assigned to this area. The Midlevel Provider sees all patients that go through this area. Directly within the lounge area is a nursing station for the staff. It has a pyxis medication dispenser. There is a blanket warmer and a linen cart in the Lounge area that is used by all the ED, but is stationed in this area due to no space within the main ED. They do not carry washcloths, towels, or pillows in the ED. The Midlevel Provider is at a desk that is located outside of the lounge area. There are no medical wall gases or wall suction in the Lounge space. When this area is open, the PIT, Provider in Triage, or MLP, is able to see these patients without them going through formal triage, but once the area fills with patients, they must be seen through the triage area. There is one toilet located off the lounge.

*Issues:*

* *Per staff, this area lacks consistency in criteria used.*
* *The area is an open space separated by some curtains, while others are not. This allows for privacy and HIPAA issues plus constant noise levels.*
* *There are no medical gases available.*
* *Area contains supplies needed by higher acuity area, so there is a steady flow of traffic through this area.*

**E2: WHICH INCLUDES TREATMENT POSITIONS 19 – 26A AND 26B:** OVERVIEW

E2 consists of two separate halls. The first hall has private rooms 19 – 23. It is handled by the Green Team. There is also an E2 Team Leader that helps assign patients to rooms for the Triage staff. The other side of the hall is rooms 24, 25, 26A, and 26B. They are handled by the yellow team. They usually see ESI acuity level 3, 4, and 5 patients. Room 19 is a negative pressure isolation room. The rooms are utilized for multiple conditions such as suturing, pediatrics, pelvic exams, belly pain, and splinting. The nursing station is a small open area in the core of the hallway. Part of the station is designated for nursing. There are usually 3 nurses and 2 techs that utilize the nursing station. The other part is for the ED physicians/MLP's and scribes. They usually have 2MLP's and 2 scribes and 1 MD and 1 scribe from E1 will float over as needed. There is a PACS within the physician space. There is a small supply closet adjacent to room 26 where they keep crutches, ortho supplies and sutures. There is a small alcove space for POC testing such as urine dipsticks across from room 23. The staff has created a small waiting area with a few chairs in the hall core across from rooms 25 and 22 that they sometimes use as a results waiting area. A medication room is adjacent to the nursing station in the hall core. There is one patient toilet that they also share with the 5 bay area.

*Issues:*

* *Patient positions have no doors, just curtains which allows for HIPAA issues and high noise levels.*
* *Limited toilets for patients and staff.*
* *Room 26 is crowded when 2 patients are in the room needing to use the ortho equipment.*

**OPEN BAY AREA:** OVERVIEW

This area is a large open area with 5 stretchers separated by curtains. They are treatment positions 14, 15, 16, 17, and 18. The Blue team is assigned this area. They see pending admission patients, ESI acuity level 3 patients, and

some monitored patients. The ED turnaround time for patients is over 6 hours from the time the admit order is written until the patient gets to the floor. They do use observation beds up on the floor for some of their patients, but there is no designated area in the ED for a Clinical Decision Unit or an Observation area. They are working on the issue with boarders and trying to improve the turnaround time on admissions. They have difficulty with the floor report and with housekeeping being available. The hospital has a hospitalist program, but they still have delays in patients being admitted. The ED physicians do not have bridge orders. The staff state the hospital has transporters to help them take patients upstairs between the hours of 10 a.m. – 12 a.m. The ED bay area is set up with a small nursing station within the room. Staff state that when one patient asks for something, then everyone hears them and they all then want the same thing. There is storage in the back of this area for supplies and Oxygen tanks for all of the ED.

***Issues:***

* *Privacy and HIPAA is an issue due to curtains and no walls.*
* *Staff from all areas of the ED must enter patient zones to reach supplies and Oxygen.*
* *Oxygen storage is in this area and is not in a secure cabinet.*
* *Staff in E1 has increased travel distances to gather supplies and oxygen tanks that need to be more readily accessible for high acuity patients.*
* *Telemetry antennas are needed throughout the ED for constant monitoring*
* *Turn-around-times for admit exceeds national standards.*
* *The nursing area is open with constant interuptions.*

## E1: TREATMENT POSITIONS 1A, 1B, 2, 3, 4, 5, 6, 7, 8, 9, 10, 11, 12A AND 12B

### ED-TRAUMA/RESUSCITATION 1A/1B AND 12A/12B: OVERVIEW

The following is a breakdown of the ED Trauma/Resuscitation rooms.

There are a total of 2 semi-private rooms for Trauma/Resuscitation. They are located in E1. The Trauma/Resuscitation rooms are #1A and 1B and #12A and 12B. They are equipped for high acuity patients. There is no overhead x-ray machine in the rooms. They utilize the portable x-ray machine when needed. Each room separates the beds by a curtain. The rooms are visible to the E1 Nursing station and easily accessible from the ambulance entrance. These rooms can be used for resuscitation and high acuity patients. All four positions have hard wired cardiac monitors. The patients in these rooms are usually Acuity Level 1 and 2. When entering the ambulance entrance, the EMS will be greeted by an EMS Intake Nurse specific for ambulance patients located just beyond the vestibule and directly outside of the nursing station. They utilize a bedside mobile workstation (BMW) for documentation. The evening

intake nurse will do a quick assessment and have the patient placed within a treatment room. The ambulance radio is also within an alcove directly outside the nursing station and adjacent to room 12. There is a large storage area within room 12. The ED states that they have issues with other departments taking their supplies and equipment. At one time, they had 72 IV pumps, but had difficulty getting their pumps back from the floors. They would like some type of tracking system for wheelchairs, pumps, and stretchers. They have a charge ticket, but needs to be updated in the computer on a regular basis. They do utilize procedure carts for IV, suturing, and ortho. They have an ED tech that cleans all stretchers once a month by hosing them down. There is only one soiled utility room in the ED and it is located by the staff lounge.

The Nursing Station is directly across from the two resuscitation rooms. It is a large open station with no glass partitions. The ambulance entrance is directly in front of the station and this causes issues for the staff during winter months and hot summers. The unit secretaries are seated at the nursing station counters closest to the ambulance entrance. Within the middle of the nursing station is a podium area that is designated for the charge nurse. The charge nurse assigns beds for E1 and has a computer at this area. There is no Medication unit or nourishment area inside the station. The staff has a medication room with a pyxis to mix drugs directly off the nursing station. There is a point of care testing alcove outside of room 7. They use I-Stat for POC. The ED staff draws the blood. There are turnaround time issues from the main laboratory. They would like to see the Lab draw and run the blood within the ED and free up the techs and nurses for patient care.

Directly within the ambulance entrance vestibule to the right is a decontamination room. On the left side of the ambulance entrance is the EMS room. The EMS room is for EMS and police and has an adjoining restroom. They have a helipad area in the street that they can clear when they need to transfer patients out.

***Issues:***

* *EMS Intake Nurse has limited space and must do assessment on all ambulance patients directly in front of the nursing station.*
* *Medications and supplies are limited in the Trauma Nursing Station. This decreases staff efficiency and increases travel distance when having to retrieve from other areas of the ED.*
* *Ambulance vestibule allows hot/cold air and outside bugs to enter area and also affect personnel seated at nursing station.*

**PSYCHIATRIC ROOMS #3, 4, 9, 10:** OVERVIEW

There are four private rooms in E1 that are set up as multipurpose rooms that are designated for psychiatric patients due to the garage door that can cover

various supplies to prevent patients from harming themselves. The rooms are not locked rooms. Many of the behavioral health patients are on PCP and are very violent and out of control. The violent patients are placed in these rooms with a police officer. Two of the rooms are on one side of the nursing station and two are on the opposite side, making it difficult for security to have the manpower to monitor the patients. There are no cameras in the rooms.

The closest bathroom for these rooms is the same as those used by the E1 patients. There is a 28 bed inpatient psychiatric unit within the hospital if the patient meets criteria for admission to that area. Approximately 70% of the behavioral health patients are voluntary and the other 30% are involuntary admissions. There are no pediatric or adolescent psychiatric beds. Patients may stay in this area for several hours, up to several days awaiting placement and transfer to other facilities. The average turnaround time in the ED for behavioral health patients is 8.8 hours. They state that the inpatient unit will only take 1 patient every 2-3 hours. Mental health evaluators are called in to assess the patient in the ED. The normal hours for the evaluators are 11 a.m. – 7 p.m. and then the rest of the time they are on call. They will see the patient and do their paperwork within the station or the social worker office which is off of E1. If they cannot get an evaluator in, then they have to wait until the next day for the patient to be seen by the mental health evaluator. There have been many issues with the behavioral health program and they plan to make adjustments in psychiatric coverage in the near future.

***Issues:***

* *There is no specific Psychiatric holding area in the ED which can create security issues.*
* *Visibility is limited due to no cameras in the rooms*
* *No work space for staff or mental health evaluator.*
* *No shower in ED for psych patients unless they use decontamination shower.*
* *Psychiatric patients utilize bathroom within E1 area and could create flight risk.*
* *Rooms are not grouped together causing security issues and increase in FTE's to monitor patients*
* *No patient belonging areas for these patients*
* *Staff would like to see an area for prisoners once medically cleared*
* *Inpatient protocol issues for accepting patients to unit in a timely fashion.*

**TREATMENT POSITIONS #2, 5, 6, 7, 8, AND 11:** OVERVIEW

The following is a breakdown of the remaining rooms in E1.

All of the treatment spaces in E1 surround the E1 nursing station. These remaining rooms are private. All the rooms have cardiac monitors. The acuity levels seen are usually ESI level 1, 2, and some acuity 3 patients. The rooms in this pod are open 24 hours per day.

Rooms #2 and #3 are negative pressure rooms, and rooms #6 and #7 have some limits in their visibility of the patient when the door is closed. The nurses chart from certain designated areas in the nursing station and the physicians and their scribes have designated areas in the nursing station. However, due to the bedside mobile workstations, (BMW's) used by the scribes and others, there is limited space. The private physicians that come see their patients will float throughout the ED and use the ED physician's workspace in the station, causing issues for the ED physician needing the area to work. There are usually 2 ED physicians in E1 until 2 a.m.

There are computers in the treatment rooms, but they do not function properly, and the staff would prefer a laptop or a computer on wheels that can be moved out of the way when necessary.

The staff lounge is located around the corner from E1. It is not large enough to meet the need of the staff. It has the only ice machine in the ED. The soiled utility room is directly down the hall from the Nursing Station. A storage/alcove and small room is located in the 5 bay area which is shared with all the ED and difficult to get to by the staff.

Workspace for three unit secretaries is provided in the nursing station facing the ambulance door.

***Issues:***

* *Hardwire monitors, IV pumps, computer, vents, portable x-ray, and staff allow for little space inside the rooms.*
* *None of the rooms are standardized with supplies and dispensers throughout the ED.*
* *The Nursing Station is very open and allows for little privacy and noise control.*
* *No off stage area for ED physicians or staff to discuss patient issues*
* *ED staff and ED physicians have to compete with other healthcare personnel for space and computers.*
* *Equipment is located in halls due to lack of storage space.*
* *Supplies are throughout the ED due to lack of storage space.*
* *No consult room or bereavement room.*
* *Blanket warmer and linen cart is in another area of the ED. The staff must constantly leave to get supplies or linens not stocked in their area.*

** There is no Nourishment alcove for patients and trays*

** Patient toilets and staff toilets are limited*

** There is no pharmacist assigned to the ED*

** There are issues on inpatient protocol for admissions.*

** ED physicians do not write bridge orders and the patient must wait for hospitalist or consult which may be delayed due to workload.*

## STAFF SUPPORT:

### OFFICES/STAFF LOUNGE: OVERVIEW

There are offices within the ED. Administrative offices are located down the hall from E2 and adjacent to the Lounge treatment space. There is a vestibule/ office for the administrative assistant. This office is directly outside three other offices: the office for the ED Medical Director, the office for the ED Nursing Director, and the ED staff that are handling schedules, quality improvement, and other responsibilities. The Emergency Services Medical Director, Dr. Eric McDonald, shares his office with 2 other staff members, one of which is the office manager for the ED physicians. The ED Nursing Director is Donald Charlson, and his office space does not lend itself to talk or counsel with staff due to size. The third office is set up for four people, but many times 5 people are within this space. There is no meeting space within the ED. The old staff break room has been turned into a paper supply area with a desk for new orientees. This is connected to male and female lockers.

There is a small office for Dawn, the Director of Registration, which is across from room 24.

Materials Management for the ED is handled by a staff member, Danetta that works at a desk in the hall. Danetta handles the medical equipment and orders supplies. The only supply room that is locked is in the open bay area. This area is too small for the amount of supplies required in a busy ED.

The ED Lounge has an area for meals, an area for lockers and a staff toilet. It is located near E1.

***Issues:***

** The administrative suite space available is limited, so offices are very tight with multiple people using the space at the same time. It is very difficult to meet or counsel staff if needed.*

** The Staff Lounge/Lockers is inadequate in space with the number of staff that works in the ED. It is utilized a lot for meals because of the distance from the clinical area to the cafeteria and that the cafeteria has limited hours.*

** There is no conference/educational room. All meetings have to be in the basement or wherever they can find space.*

** Limited staff toilets.*

## ANCILLARY DEPARTMENTS-MEDICAL IMAGING:

The ED is adjacent to the Medical Imaging department and has one 64 slice C.T. scanner within the ED that is also shared with inpatient services. This is still a distance from the Trauma rooms, but is straight down from E1. Medical Imaging has good turnaround times per the staff. They do not do a lot of oral contrast. They also have Night Hawk on midnight shift. Medical Imaging will usually come and get the patient and take them to x-ray unless it is a critical patient and the ED staff needs to assist.

## ANCILLARY DEPARTMENTS-LABORATORY:

There is a point-to-point pneumatic tube station in the ED to transport lab specimens.

They do some P.O.C. testing with I-STAT. T.A.T.'s are an issue. The ED staff draws blood. There are no set turnaround time goals established for the ED. They would like to trial a phlebotomist in this area to decrease turnaround times.

## ED MISCELLANEOUS:

They do not have SANE nurses, and most of the sexual assaults are done elsewhere and not at this facility.

Many of the issues within the ED are due to space inefficiencies and the operational processes are affected by the space limitations. The staff are working diligently to develop processes that can be done now to help with turnaround time and patient satisfaction. This will also entail doing some minor renovations to allot space for the processes to work. Approximately 60% of the staff is travelers in the ED. Creating the New ED renovation and expansion can help with recruitment and retention. The information gathered in this observational study will help in the development of the new ED design.

# SECTION 03. RECOMMENDATIONS

## MEDSTAR SOUTHERN MARYLAND HOSPITAL EMERGENCY DEPARTMENT

### RECOMMENDATIONS

1. This document contains an ED analysis of existing conditions, issues, and recommendations. The recommendations deal with Operational Efficiency, Patient and Staff Safety, and Patient Experience and Satisfaction. Some of these changes can be made in the near future, while others will need to be done in the new ED design.

### ED ENTRANCE

1. Provide improved way finding for both outside and inside the ED and to other areas of the hospital.
2. Redesign ED entrance to provide a more efficient way for patients to be initially greeted and assessed. This can be done in a reconfiguration of the registration and triage space through mobile units or possibly expanding the triage room space with an adjacent office.
3. Strategically relocate Hospital Security within the ED to provide better visualization of entrances and for a presence seen by the patients, visitors, and ED staff to minimize disruptions that occur. The majority of incidents in a hospital are in the emergency department and this could help with security staffing due to adjacencies.
4. Create lock-down of ED with use of card access to enter areas.
5. Create in the new ED an area for non-ED visitors to access the hospital after hours without going through the ED.
6. Provide a circular drop-off for ambulances with cover for inclement weather.
7. Evaluate ways to alleviate issues of the cold/hot air entering directly into the ambulance vestibule and treatment area.

### LOBBY

1. Reconfigure lobby chairs to provide waiting pods. Evaluate need for separation in waiting of low and higher acuity patients to cut back on complaints by those not understanding the different patient acuities.
2. Provide pediatric waiting space for those with families or pediatric patients that incorporates DVD player and a play area.
3. Develop financial counselor area to provide financial counseling if needed. Area should be visible and strategically located to allow for patients to access.

4. Create a bereavement/consult room in the ED where distraught family members entering the ED entrance can quickly be taken.
5. Initiate intercom system or beeper system to notify patients in the ED lobby of their turn for registration/assessment versus calling out names and walking throughout lobby to locate patients.
6. Create a patient representative program in the ED to help increase customer satisfaction through set job description including patient rounds.

**RECEPTION/REGISTRATION AREA AND QUICK LOOK NURSE**

1. Redesign reception/greeter area to allow for a parallel process of quick initial triage by the ED staff and quick registration by the registrar. Incorporate interpreter within this space if needed.
2. Design registration area with booths for patients to sit down and provide information in private, if bedside registration is not done for that patient.
3. Streamline Quick Registration process to name, chief complaint, and social security number.
4. Evaluate Kiosk Systems in hospitals for way finding and self registration. These units are being used in ED's to improve flow and reduce waits.
5. Provide visitor badges with room number and date in accordance to a set visitation policy to improve security within the ED.
6. In the present ED, staff the Triage Area based on peak times by evaluating patient arrivals. Increase the number of techs to allow for at least one tech to be a runner to bring patients to a treatment room. This will allow the nurses to remain productive and keeps triage flowing.

**CLINICAL AREA: ED DESIGN**

1. Consider modular concept for improved visibility for patients, decreased travel distances for staff and increased staff productivity.
2. Create private rooms for patient privacy and infection control.
3. Create universal rooms for all levels of acuity except trauma / resuscitation.
4. Provide one room per module with negative pressure and an adjoining bathroom. This could also be utilized for GYN patients.
5. Standardize all rooms for patient and staff safety and efficiencies.
6. Strategically locate support areas, alcoves and supply areas throughout the ED to reduce travel time and increase staff productivity. (ie: soiled rooms, nourishment rooms, medication, etc.)
7. Develop on-stage and off-stage areas for staff with good visibility of patients.
8. Evaluate computers in the room vs. documentation alcoves outside the room vs. computers at the nurse station.

9. Provide bariatric room with minimum requirements of 200 square feet.

**CLINICAL AREAS – TEAM TRIAGE/RME/FAST-TRACK**

1. Look at pursuing team triage by renovating some space now within the ED lobby. Consider creating a second triage room from the social worker office adjacent to the present triage room or mobile units that can be trialed for a period of time. Develop space to meet the needs of the Advanced Team Triage process or P.I.T. (Provider-in-Triage) in order to reduce waits and improve throughput.
2. In the new ED design, consider Team Triage/Rapid Medical Evaluation/Fast Track concept that sees Acuity Level 3, 4, and 5 patients. Patients that are true Fast Track or a "Treat & Street" patient can be seen in this area and discharged or be moved to a observed waiting area. This concept keeps patients vertical and beds available for patients with higher acuity needs. This area improves patient flow, decreases turnaround times and identifies low acuity level 3 versus high acuity level 3 that can decompensate in the ED Lobby. Staffing with a physician or MLP and nursing staff that was strictly dedicated to this module would provide for improved throughput. The mind set would be to see the low acuity patients as quickly as possible and treat without utilizing the main ED rooms. Observed waiting space with recliners would be designed for those not requiring an ED room but receiving treatment, and those awaiting results and discharge
3. Maintain consistency in this area by following set criteria.
4. A Team Leader in this area and a close relationship with the Provider-in-Triage would be of utmost importance to monitor patient flow.
5. Create an ED case manager space so they can work with patients that may need to be educated on other alternatives the next time they need healthcare, i.e. frequent flyers, those that qualify for clinics.
6. Implement process to audit charts on acuity level's 3, 4 and 5 to ensure appropriate triage in this new space.
7. Initiate throughput studies to evaluate turnaround times and root causes of delays.

**CLINICAL AREA: LOUNGE (L2 – L12) / E2: WHICH INCLUDES TREATMENT POSITIONS 19 – 26A AND 26B**

1. In the new ED, these areas will be part of the Team Triage / RME for acuity levels 3/4/5. (Higher acuity 3's will be moved to the main ED.)
2. At present, these areas need consistency on how they are used. It can be more strategically utilized with the new process they are developing for advanced triage and PIT.

## CLINICAL AREA: OPEN BAY AREA

1. Consider changing this area by removing stretchers and using Barco loungers or cardiac stretchers. This area is very tight.
2. This area needs to be re-evaluated in regards to storage of supplies and oxygen tanks.
3. Oxygen tanks need to be stored in secure cabinets.
4. Supplies need to be accessed easily by staff, and not by moving patient stretchers to access area. Develop a committee to evaluate supplies/storage.
5. In the new ED design, provide store room for bulk supplies and special orders with a desk for the store room clerk.

## CLINICAL AREAS: E1 / RESUSCITATION ROOMS

1. Evaluate which medications and supplies they do not presently stock that are needed on a regular basis in the Trauma Area. In the new design, provide space or alcoves for blanket warmers, special equipment and supplies.
2. Consider creating more space in the new ED to prepare medications. Many ED's have added a pharmacist to the ED team.
3. Create EMS intake nurse alcove for privacy of patient.
4. Evaluate I.T. technology in EMS room to better create trip reports for staff.
5. Provide telemetry throughout the ED and Medical Imaging.
6. Look at the issue regarding admission process and admit hold orders. Evaluate lab phlebotomist in ED vs. ED staff and strategically locate point of care testing.

## CLINICAL AREAS: BEHAVIORAL HEALTH

1. Relocate and/or redesign the Behavioral Health rooms. Ideally a module or group of private rooms and support space would be created so patients could be evaluated initially. This area would include a patient bathroom and shower and incorporate the M.H. evaluators and the Mental Health Techs. Video cameras could be monitored by that area. The area would provide a safer environment for patients and staff. Behavioral health guidelines will be utilized in the design.
2. If patients are to be transferred out of the hospital, a holding room within this area could be used to await pick up by sheriff or Secure Transport. This area should ideally be monitored by the ED staff with support from security as needed.
3. Evaluate if there is space presently in or adjacent to the ED that could be created into an area for these patients.

PERKINS+WILL

# SECTION 04.
# FUTURE WORKFLOW

**EXPLANATION OF COMBINED TRIAGE / RME / FAST TRACK**

1. This is a Team Triage / RME / Fast Track concept that sees Acuity Level 3, 4, and 5 patients.
2. The team consists of a Physician and/or Mid-level Provider, Nurses, Techs, and a Unit Secretary.
3. Patients that are true Fast Track or a "Treat & Street" patient can be seen in this area and discharged or be moved to a observed waiting area.
4. If assessed a higher acuity, patients will be transferred to the emergent area.
5. This concept keeps patients vertical and beds available for patients with higher acuity needs.
6. Each universal room can be used as a Triage/RME room or a Fast Track room.
7. This area improves patient flow, decreases turnaround times and identifies low acuity level 3 versus high acuity level 3 that can decompensate in the ED Lobby.

# Future State Workflow

2023 Year

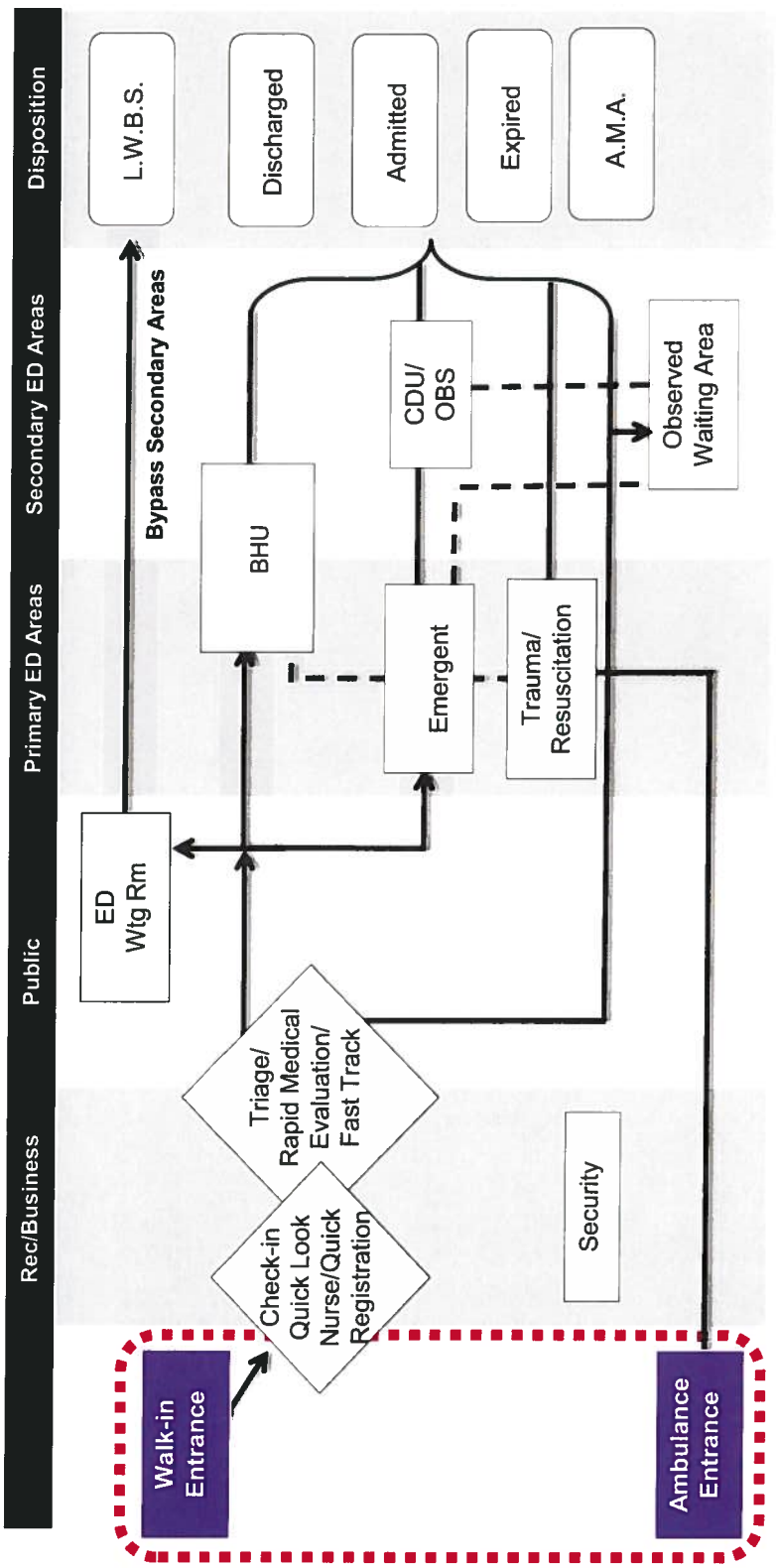


**ED patients arrive either by ambulance or as walk-ins. Walk-in ED patients intermix with family and visitors at the ED entrance.**

# Future State Workflow

**2023** *Year*

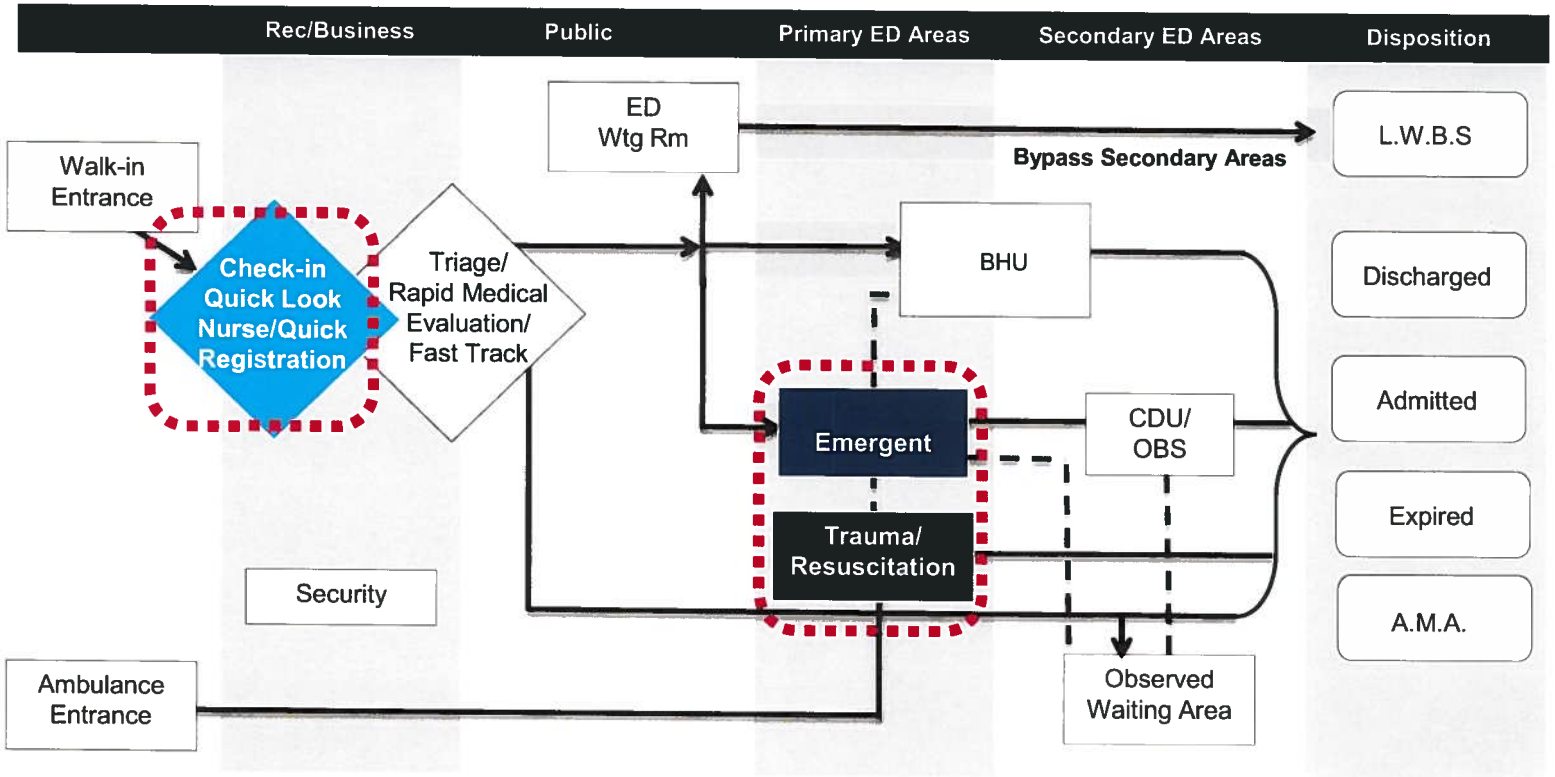


**Next, they proceed to the ED Quick Look Nurse/Quick Registration to check-in. The Quick Look nurse, quick registrar and patient rep are located in this area. They will sort through patients seeking treatment in the ED and those needing information and/or directions. The Quick Look nurse will perform a quick evaluation of the walking wounded and walking critical. If the patient is a walking critical (acuity 1 or 2) or if a bed is available and the patient is an acuity 2 , or high acuity 3, they go straight back to the treatment area and bedside registration is done.**

# Future State Workflow

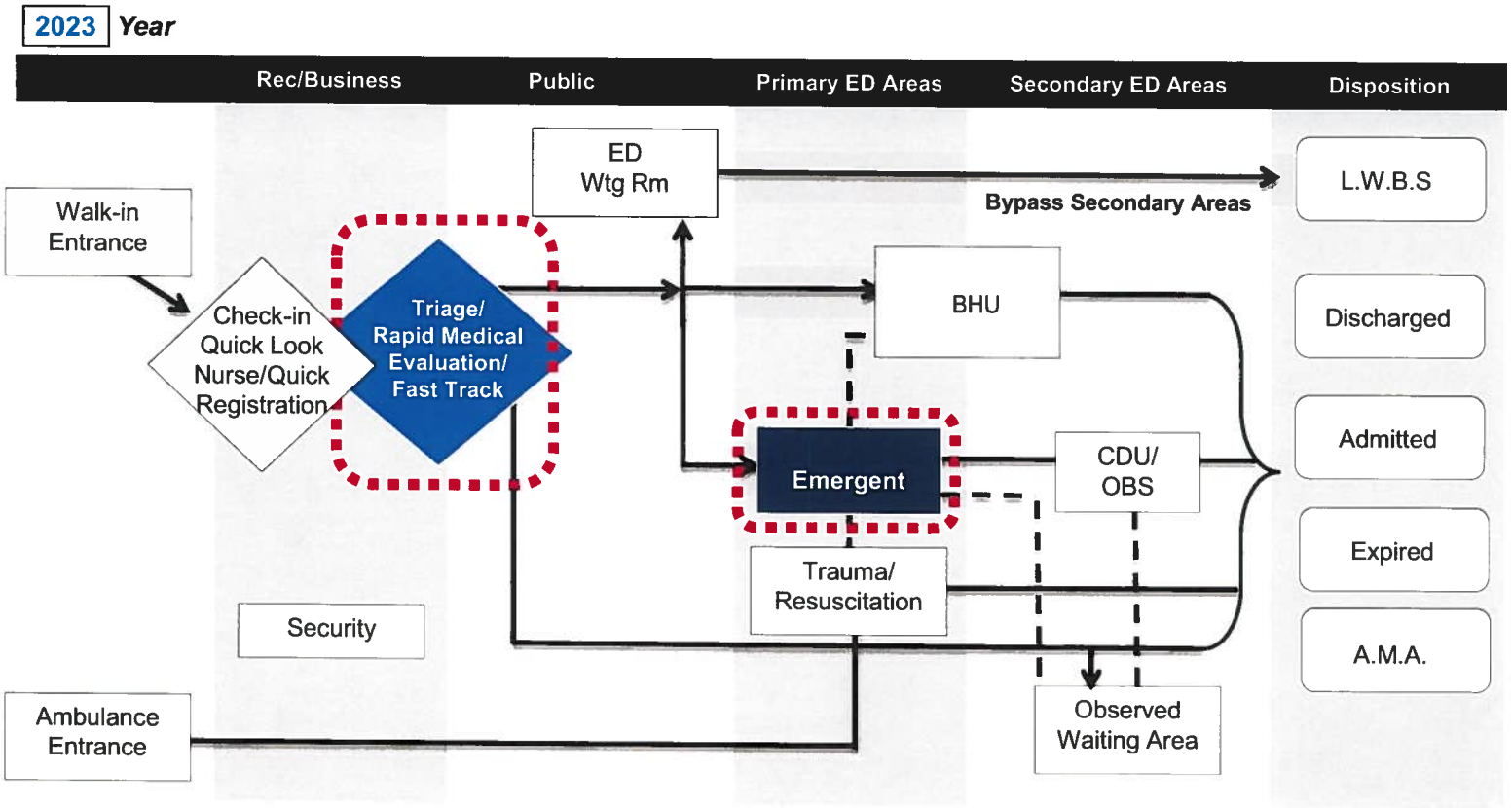


**If the patient is an acuity level 4,5, or a low acuity 3, quick registration will be done and the patients will go to the Triage/RME/Fast-track module. If the patient being triaged is assessed as a true Fast-track or a "Treat and Street" patient, they will remain in that room for treatment and the next room will become a triage room. If a patient is assessed a higher acuity, they will be transferred to the Emergent area.**

# Future State Workflow

**2023** *Year*

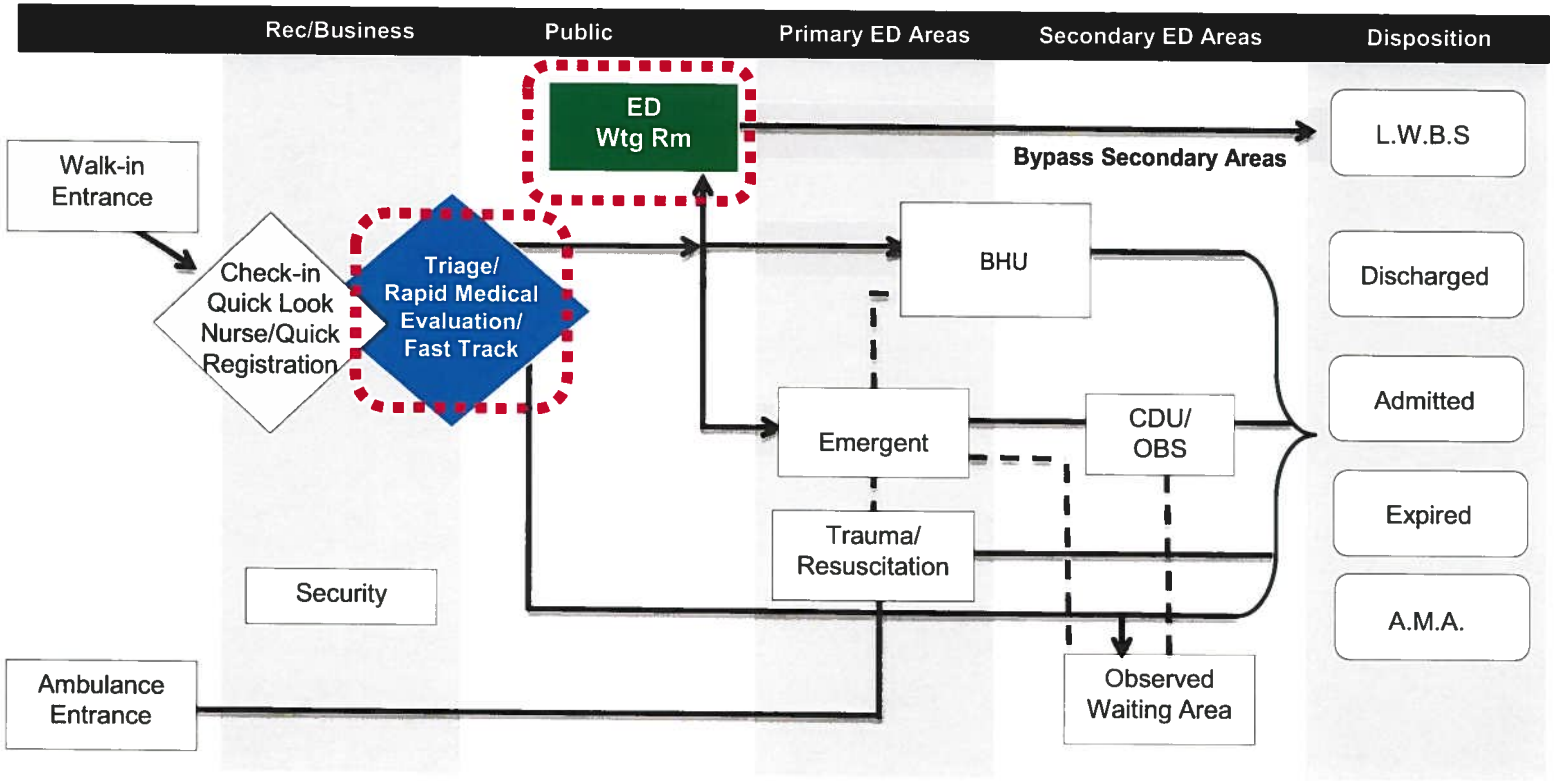


**One treatment space in the Triage/RME/F.T. must remain open for triage if all other beds are full. These patients can then be sent to the ED Waiting Room once assessed in the triage room. The Triage/RME/F.T. is designed for a team of Physicians or Midlevel Providers, Nurses, techs and unit secretary.**

# Future State Workflow

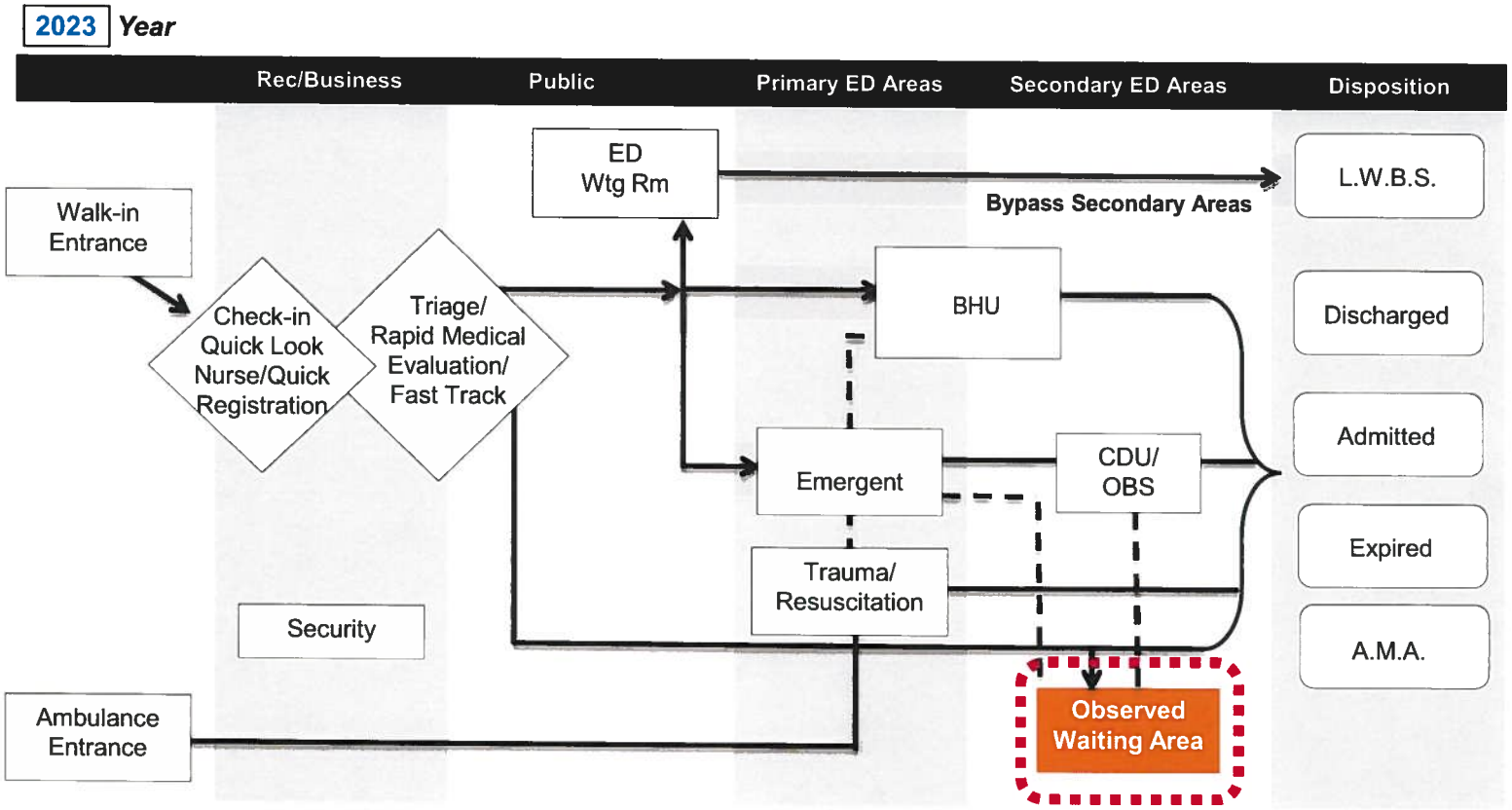


**The ED observed waiting will be strategically located adjacent to the Triage/RME/Fast Track area. This area will be utilized for patients that meet criteria for "Treat and Street" and those from the Emergent area that meet the criteria such as an extended wait due to diagnostic results or short amount of observation needed while waiting on a family member to pick them up.**

# Future State Workflow

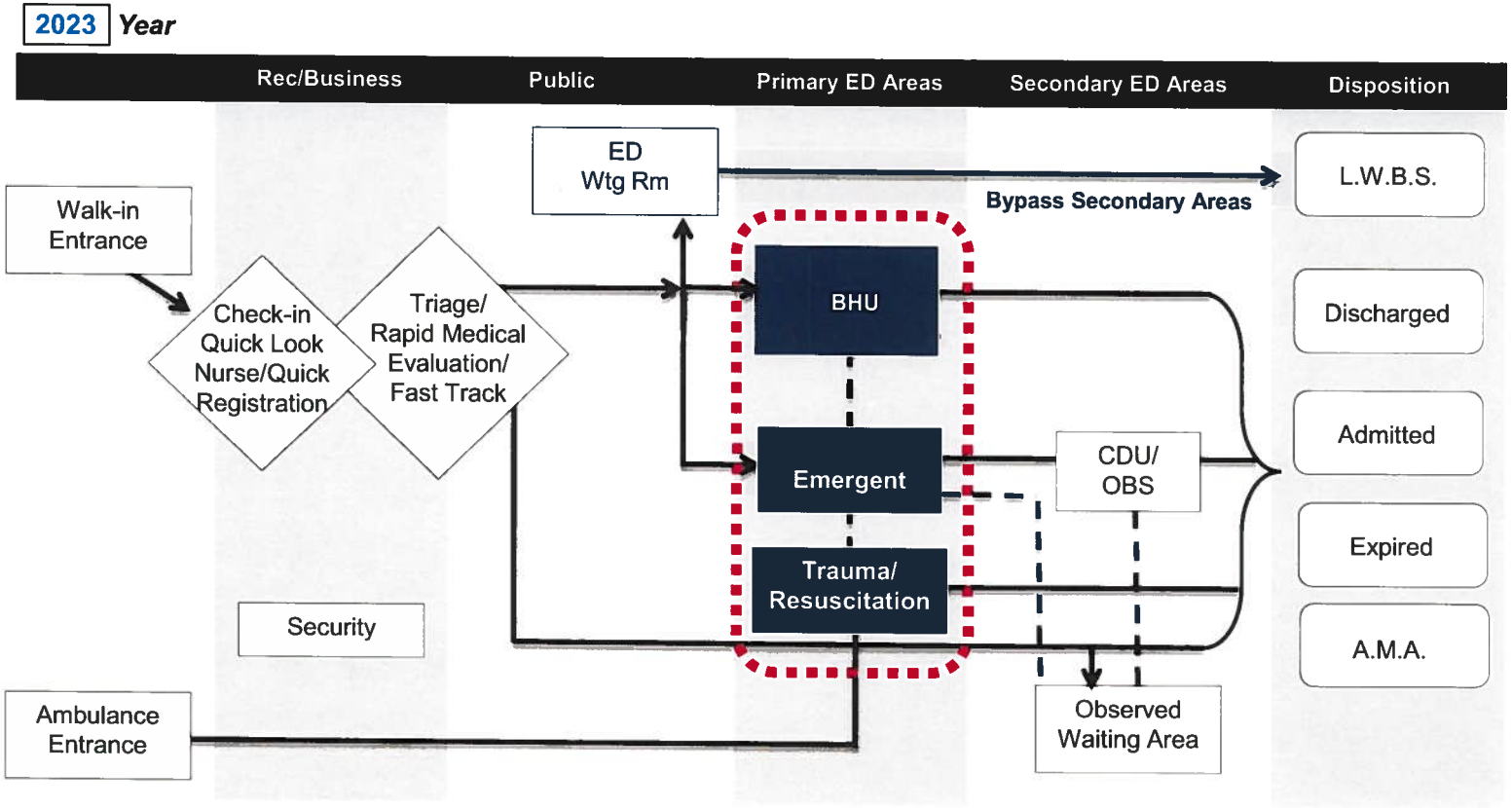


**Once a bed is available, the patient is sent to the appropriate primary emergency area and bedside registration done. In this model, the Behavioral Health rooms are part of the main ED rooms, where patients meeting the criteria for BHU can be sent there directly to be treated until disposition.**

# Future State Workflow

**2023** *Year*

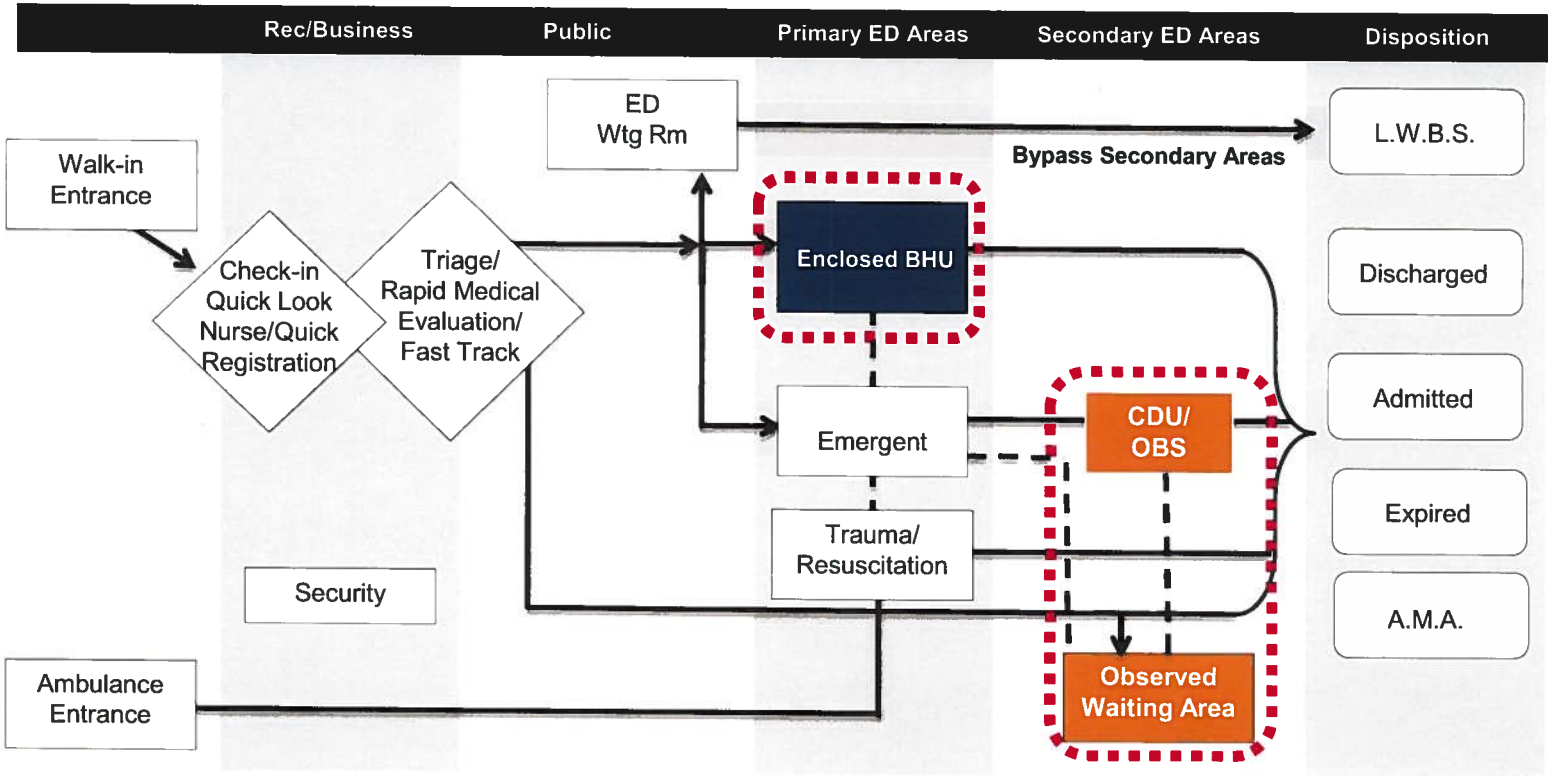


**In this model, there are two secondary areas. The CDU/OBS. is for ED patients meeting specific criteria, including soft Chest Pain, non-critical issues and Pediatric and Adult observation. The observed waiting area is for patients from the Rapid Medical Evaluation/Fast-track area that need limited observation and those emergent patients being discharged that are awaiting transport home. The Behavioral Health Unit is in the primary ED area in an enclosed, designated module, to be utilized for those BHU patients.**

# Future State Workflow

2023 Year

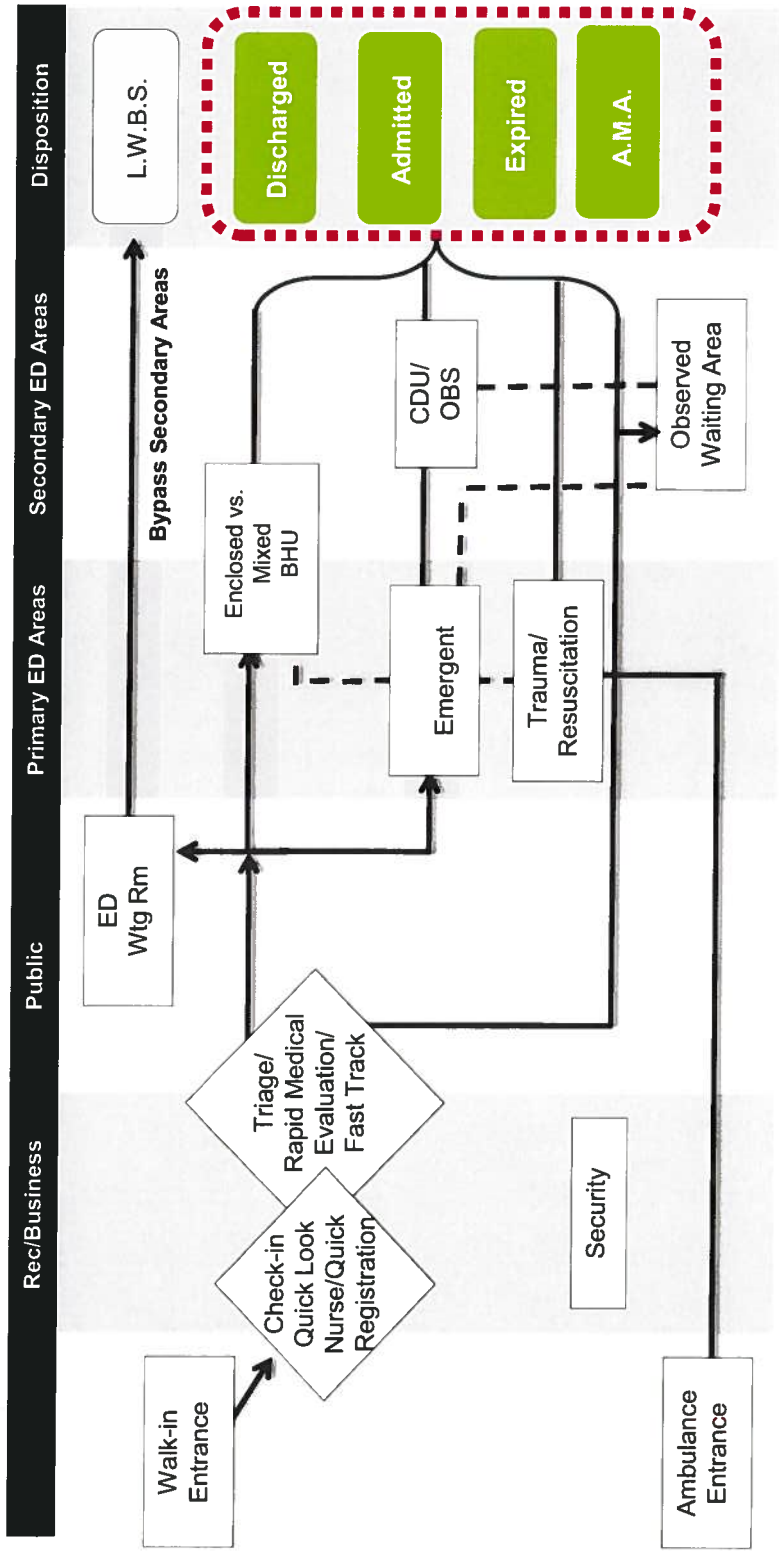


**After treatment in the Emergency Department, the patient will remain in their designated treatment area until they are either admitted, discharged, expired, or left "against medical advice" (AMA).**

PERKINS+WILL

# SECTION 05. ED PROJECTIONS/ SPACE NEEDS

## AREA MAP

3 Radii were modeled: 5 miles, 10 miles, and 15 miles. The hospital address was used as the center point.

Source: Claritas Marketplace SiteReports

PERKINS+WILL

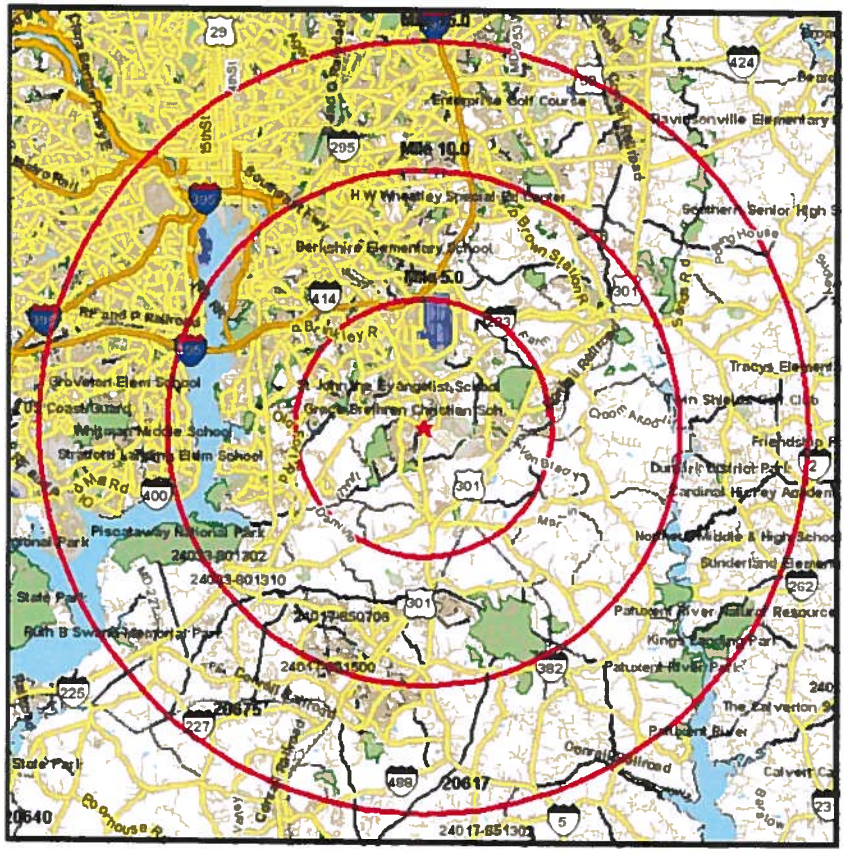


7503 SURRATTS RD
CLINTON,MD 20735-3358
Coord: 38.750101, -76.879013
Radius - See Appendix for Details

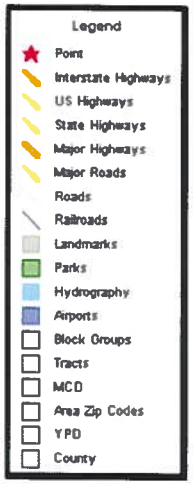


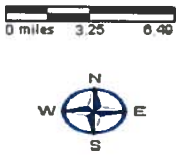

## POPULATION GROWTH RATES FOR 3 RADII

| Radius | 2010 - 2013 | Annual (avg) | 2013 – 2018 | Annual (avg) |
|---|---|---|---|---|
| 5 miles | 2.8% | 0.933% | 4.6% | 0.92% |
| 10 miles | 2.7% | 0.9% | 4.7% | 0.94% |
| 15 miles | 4.3% | 1.43% | 6.7% | 1.34% |

Population Growth Medium

Population Growth Low

Population Growth High

Source: Claritas SiteReports

## 6 FORECASTING MODELS

- Actual Volumes from 2009 – 2012 available
- Forecasting from 2013 – 2023
- 7 Forecasting Models
    - Linear Regression – Average Annual Growth – 0.94%
    - Pro Forma – 0.8% CAGR with 2014 as the baseline at 2012 volumes
    - New Capacity – 5% CAGR with 2014 as the baseline at 2012 volumes
    - Population Growth Medium = Population Growth for 5 mile radius from 2010 – 2013 of 2.8% - Average Annual Growth – 0.933%
    - Population Growth Low = Population Growth for 10 mile radius from 2010 – 2013 of 2.7% - Average Annual Growth – 0.9%
    - Population Growth High = Population Growth for 15 mile radius from 2010 – 2013 of 4.3% - Average Annual Growth – 1.43%
    - 75,000 Visits in 2023 = 1.1057% Growth Annually

# VOLUME FORECAST – LINEAR REGRESSION

Actuals

LINEAR REGRESSION - Avg 0.94%

| Year | Historical | Trendline | |
|---|---|---|---|
| 2007 | - | | |
| 2008 | - | | |
| 2009 | 64,640 | | |
| 2010 | 60,263 | | -6.77% |
| 2011 | 62,861 | | 4.31% |
| 2012 | 66,455 | | 5.72% |
| 2013 | 61,653 | 65,566 | -1.34% |
| 2014 | | 66,370 | 1.23% |
| 2015 | | 67,174 | 1.21% |
| 2016 | | 67,978 | 1.20% |
| 2017 | | 68,783 | 1.18% |
| 2018 | | 69,587 | 1.17% |
| 2019 | | 70,391 | 1.16% |
| 2020 | | 71,196 | 1.14% |
| 2021 | | 72,000 | 1.13% |
| 2022 | | 72,804 | 1.12% |
| 2023 | | 73,609 | 1.10% |

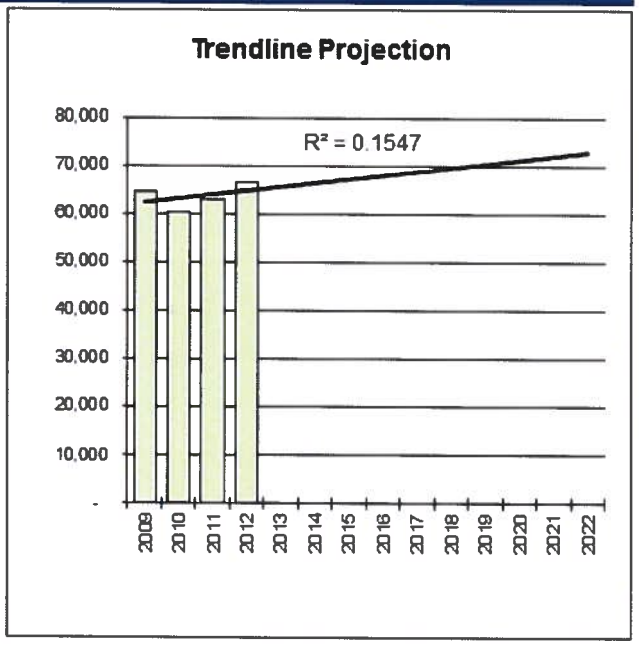


R-squared value of 0.1547 indicates that linear regression is not a good fit for forecasting future volumes.

# VOLUME FORECAST – SUMMARY

| Pro Forma - 0.8% CAGR, 2014 - 2012 | | |
|---|---|---|
| Year | % Growth | Vkld |
| 2007 | | - |
| 2008 | | - |
| 2009 | | 64,640 |
| 2010 | -6.77% | 60,263 |
| 2011 | 4.31% | 62,861 |
| 2012 | 5.72% | 66,237 |
| 2013 | | |
| 2014 | 0.80% | 66,237 |
| 2015 | 0.80% | 66,767 |
| 2016 | 0.80% | 67,301 |
| 2017 | 0.80% | 67,839 |
| 2018 | 0.80% | 68,382 |
| 2019 | 0.80% | 68,929 |
| 2020 | 0.80% | 69,481 |
| 2021 | 0.80% | 70,036 |
| 2022 | 0.80% | 70,597 |
| 2023 | 0.80% | 71,162 |

| New Capacity - 5% CAGR, 2014 - 2012 | | |
|---|---|---|
| Year | % Growth | Vkld |
| 2007 | | - |
| 2008 | | - |
| 2009 | | 64,640 |
| 2010 | -6.77% | 60,263 |
| 2011 | 4.31% | 62,861 |
| 2012 | 5.72% | 66,455 |
| 2013 | | |
| 2014 | 5.00% | 66,237 |
| 2015 | 5.00% | 69,549 |
| 2016 | 5.00% | 73,026 |
| 2017 | 5.00% | 76,678 |
| 2018 | 5.00% | 80,511 |
| 2019 | 5.00% | 84,537 |
| 2020 | 5.00% | 88,764 |
| 2021 | 5.00% | 93,202 |
| 2022 | 5.00% | 97,862 |
| 2023 | 5.00% | 102,755 |

| POPULATION - 0.933% - MED | | |
|---|---|---|
| Year | % Growth | Vkld |
| 2007 | | - |
| 2008 | | - |
| 2009 | | 64,640 |
| 2010 | -6.77% | 60,263 |
| 2011 | 4.31% | 62,861 |
| 2012 | 5.72% | 66,455 |
| 2013 | 0.93% | 67,075 |
| 2014 | 0.93% | 67,701 |
| 2015 | 0.93% | 68,332 |
| 2016 | 0.93% | 68,970 |
| 2017 | 0.93% | 69,614 |
| 2018 | 0.93% | 70,263 |
| 2019 | 0.93% | 70,919 |
| 2020 | 0.93% | 71,580 |
| 2021 | 0.93% | 72,248 |
| 2022 | 0.93% | 72,922 |
| 2023 | 0.93% | 73,603 |

| POPULATION - 0.9% - LOW | | |
|---|---|---|
| Year | % Growth | Vkld |
| 2007 | | - |
| 2008 | | - |
| 2009 | | 64,640 |
| 2010 | -6.77% | 60,263 |
| 2011 | 4.31% | 62,861 |
| 2012 | 5.72% | 66,455 |
| 2013 | 0.90% | 67,053 |
| 2014 | 0.90% | 67,657 |
| 2015 | 0.90% | 68,265 |
| 2016 | 0.90% | 68,880 |
| 2017 | 0.90% | 69,500 |
| 2018 | 0.90% | 70,125 |
| 2019 | 0.90% | 70,756 |
| 2020 | 0.90% | 71,393 |
| 2021 | 0.90% | 72,036 |
| 2022 | 0.90% | 72,684 |
| 2023 | 0.90% | 73,338 |

| POPULATION - 1.43% - HI | | |
|---|---|---|
| Year | % Growth | Vkld |
| 2007 | | - |
| 2008 | | - |
| 2009 | | 64,640 |
| 2010 | -6.77% | 60,263 |
| 2011 | 4.31% | 62,861 |
| 2012 | 5.72% | 66,455 |
| 2013 | 1.43% | 67,405 |
| 2014 | 1.43% | 68,369 |
| 2015 | 1.43% | 69,347 |
| 2016 | 1.43% | 70,339 |
| 2017 | 1.43% | 71,344 |
| 2018 | 1.43% | 72,365 |
| 2019 | 1.43% | 73,399 |
| 2020 | 1.43% | 74,449 |
| 2021 | 1.43% | 75,514 |
| 2022 | 1.43% | 76,594 |
| 2023 | 1.43% | 77,689 |

Without significant changes, the hospital is likely to have 71,000 – 78,000 visits in 2023.

# VOLUME FORECAST – GRAPHICAL COMPARISON

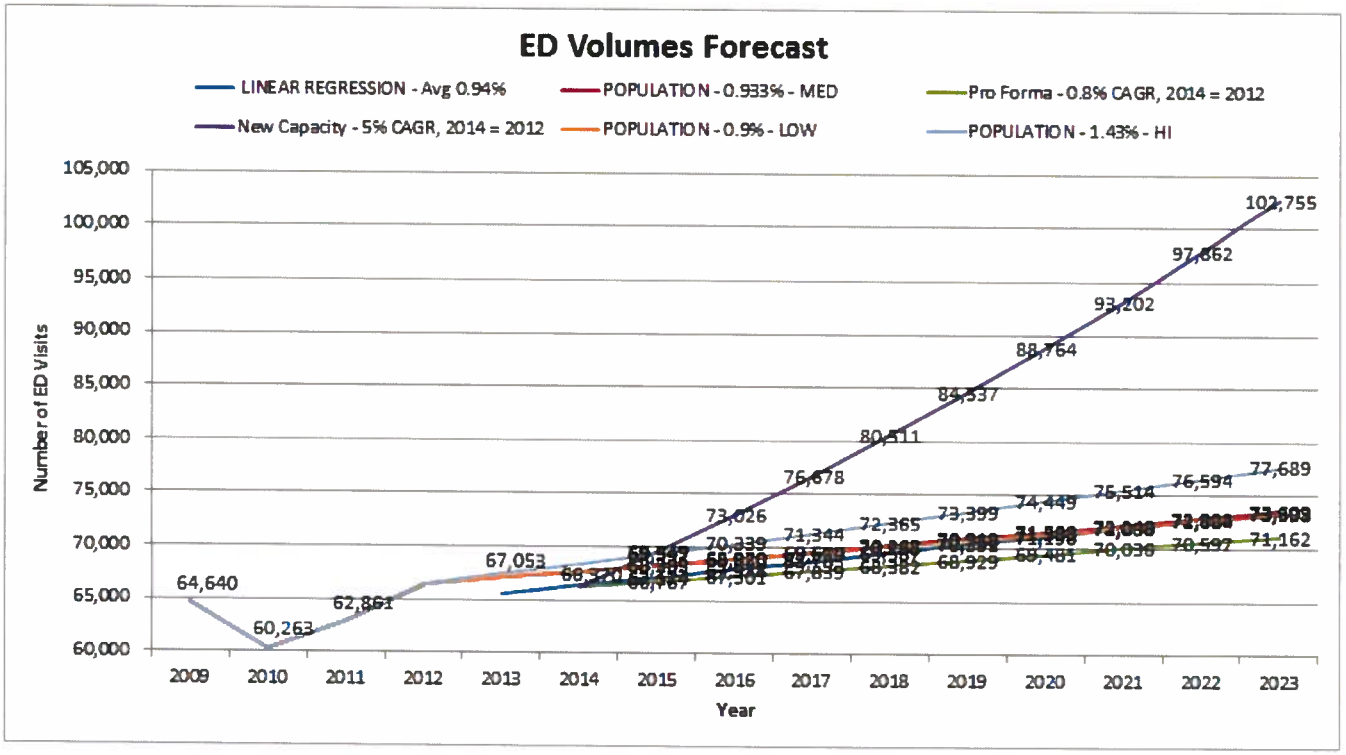

# VOLUME FORECAST – 75,000 VISITS IN 2023

| 75K in 2023 - 1.1057% | | |
|---|---|---|
| Year | % Growth | Wkld |
| 2007 | | - |
| 2008 | | - |
| 2009 | | 64,640 |
| 2010 | -6.77% | 60,263 |
| 2011 | 4.31% | 62,861 |
| 2012 | 5.72% | 66,455 |
| 2013 | 1.1057% | 67,190 |
| 2014 | 1.1057% | 67,933 |
| 2015 | 1.1057% | 68,684 |
| 2016 | 1.1057% | 69,443 |
| 2017 | 1.1057% | 70,211 |
| 2018 | 1.1057% | 70,987 |
| 2019 | 1.1057% | 71,772 |
| 2020 | 1.1057% | 72,566 |
| 2021 | 1.1057% | 73,368 |
| 2022 | 1.1057% | 74,180 |
| 2023 | 1.1057% | 75,000 |

## VOLUME FORECAST – CONSIDERATIONS

- Volume Forecasts assume that things remain about the same as they are today.
- Consider the impact of other factors
  - Healthcare reform
  - New/upgraded facility
  - Closure or addition of other facilities in the area
  - Changes to access to care from a shift in primary care provider availability
  - MedStar brand
  - Transparency → Competition on process (wait times) and quality metrics (mortality, outcomes)

# VOLUME FORECAST – BREAKDOWN BY AREA

## MedStar Southern Maryland Hospital Center

Workload by Area
75K in 2023 - 1.1057%

| | Year | Total ED Visits | Primary Areas: Main ED - Discharged | | Main ED - Admitted | | Psych - Admitted | | Main ED - Transferred | | Fast Track | | LWBS | |
|---|---|---|---|---|---|---|---|---|---|---|---|---|---|---|
| | 2009 | 64,640 | | | | | 1.7% | 1,074 | | | | | | |
| | 2010 | 60,263 | | | | | 1.8% | 1,065 | | | | | | |
| | 2011 | 62,861 | | | | | 1.5% | 934 | | | | | | |
| | 2012 | 66,455 | 72% | 47,753 | 20% | 13,149 | 1.2% | 815 | 2% | 1,515 | | | 2% | 1,058 |
| PREDICTED | 2013 | 67,190 | 75% | 50,470 | 20% | 13,294 | 1.2% | 824 | 2% | 1,532 | | | 2% | 1,070 |
| PREDICTED | 2014 | 67,933 | 39% | 26,572 | 20% | 13,441 | 1.2% | 833 | 2% | 1,549 | 36% | 24,456 | 2% | 1,082 |
| PREDICTED | 2015 | 68,684 | 39% | 26,866 | 20% | 13,590 | 1.2% | 842 | 2% | 1,566 | 36% | 24,726 | 2% | 1,093 |
| PREDICTED | 2016 | 69,443 | 39% | 27,163 | 20% | 13,740 | 1.2% | 852 | 2% | 1,583 | 36% | 25,000 | 2% | 1,106 |
| PREDICTED | 2017 | 70,211 | 39% | 27,463 | 20% | 13,892 | 1.2% | 861 | 2% | 1,601 | 36% | 25,276 | 2% | 1,118 |
| PREDICTED | 2018 | 70,987 | 39% | 27,767 | 20% | 14,046 | 1.2% | 871 | 2% | 1,618 | 36% | 25,555 | 2% | 1,130 |
| PREDICTED | 2019 | 71,772 | 39% | 28,074 | 20% | 14,201 | 1.2% | 880 | 2% | 1,636 | 36% | 25,838 | 2% | 1,143 |
| PREDICTED | 2020 | 72,566 | 39% | 28,385 | 20% | 14,358 | 1.2% | 890 | 2% | 1,654 | 36% | 26,124 | 2% | 1,155 |
| PREDICTED | 2021 | 73,368 | 39% | 28,698 | 20% | 14,517 | 1.2% | 900 | 2% | 1,673 | 36% | 26,413 | 2% | 1,168 |
| PREDICTED | 2022 | 74,180 | 39% | 29,016 | 20% | 14,677 | 1.2% | 910 | 2% | 1,691 | 36% | 26,705 | 2% | 1,181 |
| PREDICTED | 2023 | 75,000 | 39% | 29,337 | 20% | 14,840 | 1.2% | 920 | 2% | 1,710 | 36% | 27,000 | 2% | 1,194 |

**Assumptions:**

Start a Fast Track in 2014, consisting of ESI4 and ESI5 patients (36% of patients).
Main ED sees ESI1, ESI2, and ESI3 patients.
75,000 visits in 2023.
No separate area for pediatric patients.

## CALCULATING ROOM NEEDS

Average Room Times - Current, Target, and Benchmark

| Hours | Current | Target | Benchmark |
|---|---|---|---|
| Main ED – Discharged | 2.55 | 3.00 | 2.00 |
| Main ED – Admittted | 6.22 | 4.00 | 3.50 |
| Psych – Admitted | 7.19 | 7.19 | 6.00 |
| Main ED – Transferred | 6.27 | 4.00 | 3.50 |
| Fast Track | 2.55 | 1.50 | 1.00 |
| LWBS | 2.55 | 1.50 | 1.00 |

## CALCULATING ROOM NEEDS
### Model Assumptions

- Poisson Distribution was used, with calculations assuming that a room is available 99% of the time.
- Use of this model ensures room available during the busiest months and busiest shifts.

## ROOM NEEDS

75,000 Visits in 2023 Model

| Total Primary Tx Areas | Ex. Pos. | Current Turn Times | | | Target Turn Times | | | Benchmark Turn Times | | |
|---|---|---|---|---|---|---|---|---|---|---|
| | Total | 2012 | 2017 | 2023 | 2012 | 2017 | 2023 | 2012 | 2017 | 2023 |
| Main ED - Discharged | | 30 | 18 | 19 | 35 | 22 | 23 | 24 | 15 | 15 |
| Main ED - Admitted | | 23 | 24 | 26 | 15 | 16 | 17 | 13 | 14 | 15 |
| Psych - Admitted | | 3 | 4 | 4 | 3 | 4 | 4 | 3 | 3 | 3 |
| Main ED - Transferred | | 4 | 5 | 5 | 3 | 3 | 3 | 3 | 3 | 3 |
| Fast Track | | 0 | 19 | 21 | 0 | 12 | 12 | 0 | 8 | 8 |
| LWBS | | 2 | 2 | 2 | 1 | 1 | 1 | 1 | 1 | 1 |
| *Subtotal* | *41* | *62* | *72* | *77* | *57* | *58* | *60* | *44* | *44* | *45* |

1315 Peachtree Street, NE
Atlanta, GA 30309

PERKINS+WILL

perkinswill.com

RLB | Rider Levett Bucknall

# Report - DRAFT

## Preliminary Design Cost Estimate

## Medstar Southern Maryland Hospital Addition and Renovation

Clinton, MD

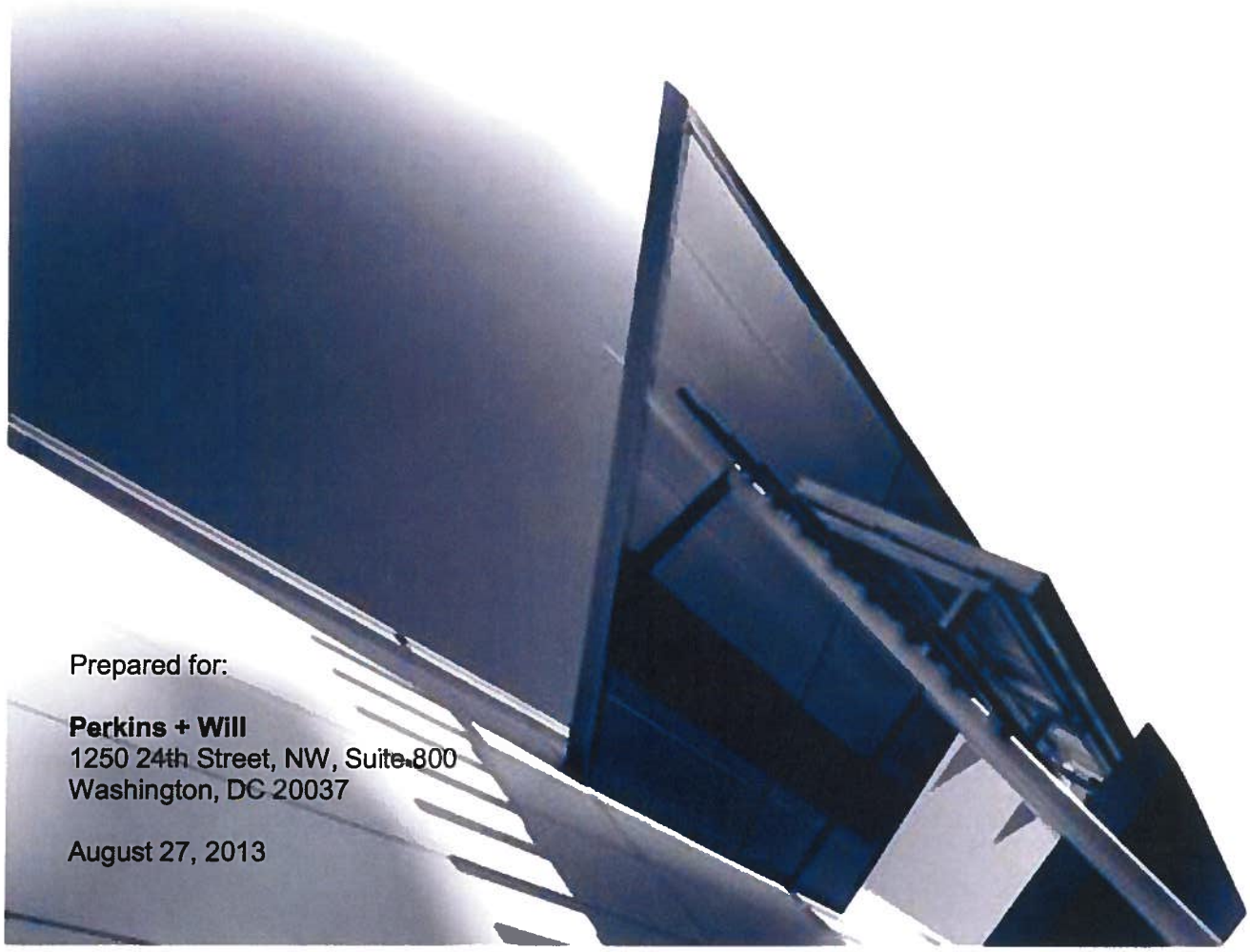

Prepared for:

**Perkins + Will**
1250 24th Street, NW, Suite 800
Washington, DC 20037

August 27, 2013

RLB | Rider Levett Bucknall

RLB | Rider Levett Bucknall

Medstar Southern Maryland Hospital - Addition and Renovation
Clinton, MD

Preliminary Design Cost Estimate

INDEX

1.0 BASIS OF ESTIMATE

2.0 ESTIMATE COST SUMMARIES

3.0 ESTIMATE DETAIL - Option A

4.0 ESTIMATE DETAIL - Option B

5.0 ESTIMATE DETAIL - Option C

# 1.0 BASIS OF ESTIMATE

# Medstar Southern Maryland Hospital - Addition / Renovation

## Preliminary Design Cost Estimate - Option A

Estimate Clarification

### Description

***Basis of Estimate***

This estimate has been prepared at the request of Perkins + Will and is to provide a Preliminary Design Cost Estimate for the proposed addition and interior renovation of the existing Medstar Southern Maryland Hospital, located in Clinton, MD.

The estimate is based upon measured quantities and built-up rates prepared from the Concept Design drawings issued to RLB on August 15th and 16th, prepared by Perkins + Will.

Where information was insufficient, assumptions and allowances were made based wherever possible on discussions with the architect and engineers.

It is assumed that the project will be competitively bid by four to six general contractors and that the awarded contractor and all subcontractors will be required to pay prevailing wage rates.

Unit pricing is based on August 2013 costs. A Design / Estimating Contingency of 15.0% has been included, and Construction Cost Escalation has also been included at 15.0%.

***Items Specifically Included***

Please refer to estimate detail

***Items Specifically Excluded***

. Works to existing building façade
. Works to existing building roof coverings
. Works to existing areas shown as "NIC" on floor plans
. Site development and/or construction, outside of areas affected by new construction
. Upgrading of existing structure to support additional floors (not required, as directed by P+W)
. Upgrading of existing elevators to serve additional floors (not required, as directed by P+W)
. Out of hours work, unless noted otherwise.
. Photovoltaics and other renewable energy resources
. Medical equipment (by Owner)
. Gym / rehabilitation equipment (by Owner)
. Food service equipment (by Owner)
. Loose medical equipment, casework, and furniture (by Owner)
. Loose casework and furniture to patient rooms, waiting areas, etc (by Owner)
. Commercial fit-out to coffee kiosk, gift shop, vending area, etc (by Owner / Tenant)
. Filling of medical gas, other than required for testing and commissioning
. Deep pile foundation systems
. Dewatering
. Furniture, Fittings and Equipment (FF&E)
. Murals and works of art
. Special testing & inspections
. Utility tap fees and charges
. Permits & plan review fees
. Construction management fees
. Owner's contingency
. Construction phase contingency
. Land and legal costs
. Architectural, Engineering and other professional fees
. Geotechnical, traffic and all other studies
. Items marked as "Excl." in the estimate
. Escalation beyond Q2 2017

## Medstar Southern Maryland Hospital - Addition / Renovation

### Preliminary Design Cost Estimate - Option A

Estimate Clarification

| Description |
| --- |
| ***Alternates*** |
| . Alternate #1 - 3,600 sqft below grade shell space ( + $900,000) |
| . Alternate #2 - (3) levels additional shell space above emergency dept. ( + $10,100,00) |
| . Alternate #3 - preserve existing ambulance court and helipad ( - $400,000) |
| . Alternate #4 - (2) story 180-space parking structure ( + $7,800,000) |

# 2.0 ESTIMATE COST SUMMARIES

# Medstar Southern Maryland Hospital - Addition / Renovation

## Preliminary Design Cost Estimate - Option A

Location Summary

GFA: Gross Floor Area
Rates Current At August 2013

| Location | | GFA SF | Cost/SF | Total Cost |
|---|---|---|---|---|
| **ALL ALL LOCATIONS** | | **163,328** | **268.82** | **43,906,380** |
| | **ESTIMATED NET COST** | **163,328** | **$268.82** | **$43,906,380** |
| **MARGINS & ADJUSTMENTS** | | | | |
| Phasing / Temporary Works | 5.0 % | | | $2,195,319 |
| General Conditions | 9.0 % | | | $4,149,153 |
| Bonds and Insurances | 3.0 % | | | $1,507,526 |
| Overhead and Profit | 4.5 % | | | $2,329,127 |
| Design / Estimating Contingency | 15.0 % | | | $8,113,126 |
| Escalation | 15.0 % | | | $9,349,369 |
| | **ESTIMATED TOTAL COST** | **163,328** | **$438.08** | **$71,550,000** |

# Medstar Southern Maryland Hospital - Addition / Renovation

## Preliminary Design Cost Estimate - Option B

Location Summary

GFA: Gross Floor Area
Rates Current At August 2013

| Location | | GFA SF | Cost/SF | Total Cost |
|---|---|---|---|---|
| **ALL ALL LOCATIONS** | | **155,153** | **278.88** | **43,269,579** |
| | **ESTIMATED NET COST** | **155,153** | **$278.88** | **$43,269,579** |
| **MARGINS & ADJUSTMENTS** | | | | |
| Phasing / Temporary Works | 5.0 % | | | $2,163,479 |
| General Conditions | 9.0 % | | | $4,088,975 |
| Bonds and Insurances | 3.0 % | | | $1,485,661 |
| Overhead and Profit | 4.5 % | | | $2,295,346 |
| Design / Estimating Contingency | 15.0 % | | | $7,995,456 |
| Escalation | 15.0 % | | | $9,201,504 |
| | **ESTIMATED TOTAL COST** | **155,153** | **$454.39** | **$70,500,000** |

# Medstar Southern Maryland Hospital - Addition / Renovation

## Preliminary Design Cost Estimate - Option C

Location Summary

GFA: Gross Floor Area
Rates Current At August 2013

| Location | | GFA SF | Cost/SF | Total Cost |
|---|---|---|---|---|
| **ALL ALL LOCATIONS** | | **184,347** | **270.15** | **49,800,969** |
| | **ESTIMATED NET COST** | **184,347** | **$270.15** | **$49,800,969** |
| **MARGINS & ADJUSTMENTS** | | | | |
| Phasing / Temporary Works | 5.0 % | | | $2,490,048 |
| General Conditions | 9.0 % | | | $4,706,192 |
| Bonds and Insurances | 3.0 % | | | $1,709,916 |
| Overhead and Profit | 4.5 % | | | $2,641,821 |
| Design / Estimating Contingency | 15.0 % | | | $9,202,342 |
| Escalation | 15.0 % | | | $10,598,712 |
| | **ESTIMATED TOTAL COST** | **184,347** | **$440.20** | **$81,150,000** |

# 3.0 ESTIMATE DETAIL - Option A

# Medstar Southern Maryland Hospital - Addition / Renovation

## Preliminary Design Cost Estimate - Option A

Location Summary

GFA: Gross Floor Area
Rates Current At August 2013

| Location | | GFA SF | Cost/SF | Total Cost |
|---|---|---|---|---|
| **ALL ALL LOCATIONS** | | **163,328** | **268.82** | **43,906,380** |
| | **ESTIMATED NET COST** | **163,328** | **$268.82** | **$43,906,380** |
| **MARGINS & ADJUSTMENTS** | | | | |
| Phasing / Temporary Works | 5.0 % | | | $2,195,319 |
| General Conditions | 9.0 % | | | $4,149,153 |
| Bonds and Insurances | 3.0 % | | | $1,507,526 |
| Overhead and Profit | 4.5 % | | | $2,329,127 |
| Design / Estimating Contingency | 15.0 % | | | $8,113,126 |
| Escalation | 15.0 % | | | $9,349,369 |
| | **ESTIMATED TOTAL COST** | **163,328** | **$438.08** | **$71,550,000** |

# Medstar Southern Maryland Hospital - Addition / Renovation

## Preliminary Design Cost Estimate - Option A

Divisions/Elements Summary

Gross Floor Area: 163,328 SF
Rates Current At August 2013

| Description | | Cost/SF | Total Cost |
|---|---|---|---|
| **02 Existing Conditions** | | | |
| F2010 | Building Elements Demolition | 4.32 | 706,388 |
| F2020 | Hazardous Components Abatement | 2.66 | 433,735 |
| G1010 | Site Clearing | 0.15 | 25,000 |
| G1020 | Site Demolition and Relocations | 1.29 | 209,914 |
| G1040 | Hazardous Waste Remediation | | |
| | ***Existing Conditions*** | ***$8.42*** | ***$1,375,037*** |
| **03 Concrete** | | | |
| A1010 | Standard Foundations | 1.04 | 170,150 |
| A1030 | Slab on Grade | 2.19 | 356,952 |
| A2020 | Basement Walls | 2.39 | 390,280 |
| B1010 | Floor Construction | 8.18 | 1,335,942 |
| B1020 | Roof Construction | 8.80 | 1,437,963 |
| B2010 | Exterior Walls | 0.07 | 10,800 |
| | ***Concrete*** | ***$22.67*** | ***$3,702,087*** |
| **04 Masonry** | | | |
| B2010 | Exterior Walls | 6.84 | 1,117,800 |
| | ***Masonry*** | ***$6.84*** | ***$1,117,800*** |
| **05 Metals** | | | |
| C1030 | Fittings | 0.62 | 101,695 |
| C2010 | Stair Construction | 0.38 | 62,500 |
| | ***Metals*** | ***$1.01*** | ***$164,195*** |
| **06 Wood, Plastics, and Composites** | | | |
| C1030 | Fittings | 1.45 | 237,584 |
| | ***Wood, Plastics, and Composites*** | ***$1.45*** | ***$237,584*** |
| **07 Thermal and Moisture Protection** | | | |
| A1030 | Slab on Grade | 1.10 | 179,423 |
| A2020 | Basement Walls | 0.58 | 95,452 |
| B1010 | Floor Construction | 0.01 | 750 |
| B1020 | Roof Construction | 0.23 | 37,050 |
| B2010 | Exterior Walls | 2.53 | 413,430 |
| B3010 | Roof Coverings | 2.19 | 356,952 |
| C1030 | Fittings | 1.94 | 316,778 |
| | ***Thermal and Moisture Protection*** | ***$8.57*** | ***$1,399,835*** |
| **08 Openings** | | | |
| B2010 | Exterior Walls | 0.74 | 121,500 |
| B2020 | Exterior Windows | 1.67 | 272,400 |
| B2030 | Exterior Doors | 0.36 | 58,400 |
| C1010 | Partitions | 1.60 | 261,100 |

# Medstar Southern Maryland Hospital - Addition / Renovation

## Preliminary Design Cost Estimate - Option A

Divisions/Elements Summary

Gross Floor Area: 163,328 SF
Rates Current At August 2013

| Description | | Cost/SF | Total Cost |
|---|---|---|---|
| C1020 | Interior Doors | 6.13 | 1,001,434 |
| | ***Openings*** | ***$10.50*** | ***$1,714,834*** |
| **09 Finishings** | | | |
| B2010 | Exterior Walls | 0.42 | 69,070 |
| C1010 | Partitions | 9.95 | 1,625,370 |
| C2020 | Stair Finishes | 0.03 | 4,588 |
| C3010 | Wall Finishes | 6.38 | 1,041,849 |
| C3020 | Floor Finishes | 7.90 | 1,291,045 |
| C3030 | Ceiling Finishes | 6.32 | 1,032,906 |
| | ***Finishings*** | ***$31.01*** | ***$5,064,828*** |
| **10 Specialties** | | | |
| C1030 | Fittings | 14.06 | 2,296,051 |
| | ***Specialties*** | ***$14.06*** | ***$2,296,051*** |
| **11 Equipment** | | | |
| E1010 | Commercial Equipment | 0.08 | 13,500 |
| E1020 | Institutional Equipment | | |
| E1030 | Vehicular Equipment | 0.03 | 5,000 |
| | ***Equipment*** | ***$0.11*** | ***$18,500*** |
| **12 Furnishings** | | | |
| E2010 | Fixed Furnishings | 5.39 | 879,839 |
| E2020 | Movable Furnishings | | |
| | ***Furnishings*** | ***$5.39*** | ***$879,839*** |
| **13 Special Construction** | | | |
| F1030 | Special Construction Systems | 2.47 | 403,835 |
| | ***Special Construction*** | ***$2.47*** | ***$403,835*** |
| **14 Conveying Equipment** | | | |
| D1010 | Elevators & Lifts | 3.06 | 500,000 |
| | ***Conveying Equipment*** | ***$3.06*** | ***$500,000*** |
| **21 Fire Suppression** | | | |
| D4010 | Sprinklers | 3.90 | 636,979 |
| | ***Fire Suppression*** | ***$3.90*** | ***$636,979*** |
| **22 Plumbing** | | | |
| D2090 | Other Plumbing Systems | 22.30 | 3,642,947 |
| | ***Plumbing*** | ***$22.30*** | ***$3,642,947*** |
| **23 Heating, Ventilating, and Air Conditioning** | | | |
| D3090 | Other HVAC Systems & Equipment | 57.22 | 9,344,951 |
| | ***Heating, Ventilating, and Air Conditioning*** | ***$57.22*** | ***$9,344,951*** |

# Medstar Southern Maryland Hospital - Addition / Renovation

## Preliminary Design Cost Estimate - Option A

Divisions/Elements Summary

Gross Floor Area: 163,328 SF
Rates Current At August 2013

| Description | | Cost/SF | Total Cost |
|---|---|---|---|
| **25 Integrated Automation** | | | |
| D3060 Controls & Instrumentations | | | |
| | ***Integrated Automation*** | | |
| **26 Electrical** | | | |
| D5090 Other Electrical Systems | | 34.91 | 5,702,004 |
| | ***Electrical*** | ***$34.91*** | ***$5,702,004*** |
| **27 Communications** | | | |
| D5030 Communications & Security | | 12.61 | 2,059,057 |
| | ***Communications*** | ***$12.61*** | ***$2,059,057*** |
| **28 Electronic Safety and Security** | | | |
| D5030 Communications & Security | | 10.73 | 1,752,157 |
| | ***Electronic Safety and Security*** | ***$10.73*** | ***$1,752,157*** |
| **31 Earthwork** | | | |
| A1020 Special Foundations | | | |
| A1030 Slab on Grade | | 0.32 | 52,465 |
| G1030 Site Earthwork | | 2.77 | 452,505 |
| G2050 Landscaping | | 0.32 | 51,905 |
| | ***Earthwork*** | ***$3.41*** | ***$556,875*** |
| **32 Exterior Improvements** | | | |
| G2020 Parking Lots | | 2.08 | 339,529 |
| G2030 Pedestrian Paving | | 0.53 | 86,445 |
| G2040 Site Development | | 2.28 | 372,915 |
| G2050 Landscaping | | 0.95 | 154,932 |
| | ***Exterior Improvements*** | ***$5.84*** | ***$953,821*** |
| **33 Utilities** | | | |
| G1020 Site Demolition and Relocations | | 2.35 | 383,164 |
| | ***Utilities*** | ***$2.35*** | ***$383,164*** |
| | **ESTIMATED NET COST** | **$268.82** | **$43,906,380** |
| **MARGINS & ADJUSTMENTS** | | | |
| Phasing / Temporary Works | 5.0 % | | $2,195,319 |
| General Conditions | 9.0 % | | $4,149,153 |
| Bonds and Insurances | 3.0 % | | $1,507,526 |
| Overhead and Profit | 4.5 % | | $2,329,127 |
| Design / Estimating Contingency | 15.0 % | | $8,113,126 |
| Escalation | 15.0 % | | $9,349,369 |
| | **ESTIMATED TOTAL COST** | **$438.08** | **$71,550,000** |

# Medstar Southern Maryland Hospital - Addition / Renovation

## Preliminary Design Cost Estimate - Option A

Gross Floor Area: 163,328 SF
Rates Current At August 2013

Divisions/Elements/Item

| Description | | Unit | Qty | Rate | Total Cost |
|---|---|---|---|---|---|
| **02** | **Existing Conditions** | | | | |
| **F2010** | **Building Elements Demolition** | | | | |
| 29 | Demolish and remove existing single-level building | SF | 7,184 | 10.00 | 71,840 |
| 31 | Dismantle and remove existing exterior wall construction | SF | 9,510 | 2.50 | 23,775 |
| 32 | Dismantle and remove existing basement retaining wall | SF | 5,620 | 2.50 | 14,050 |
| 30 | Allowance for full interior demolition to renovated areas | SF | 79,563 | 7.50 | 596,723 |
| | ***Building Elements Demolition*** | | | ***$4.32/SF*** | ***$706,388*** |
| **F2020** | **Hazardous Components Abatement** | | | | |
| 33 | Allowance for hazardous materials abatement | SF | 86,747 | 5.00 | 433,735 |
| | ***Hazardous Components Abatement*** | | | ***$2.66/SF*** | ***$433,735*** |
| **G1010** | **Site Clearing** | | | | |
| 171 | Allowance for site clearing | Item | | | 25,000 |
| | ***Site Clearing*** | | | ***$0.15/SF*** | ***$25,000*** |
| **G1020** | **Site Demolition and Relocations** | | | | |
| 144 | Demolish and remove existing retaining walls | LF | 121 | 75.00 | 9,075 |
| 147 | Demolish and remove existing curb | LF | 4,160 | 5.00 | 20,800 |
| 146 | Break-out and remove existing parking / access pavement | SF | 70,776 | 1.25 | 88,470 |
| 145 | Break-out and remove existing walkway | SF | 11,924 | 1.25 | 14,905 |
| 148 | Break-out and remove existing concrete pads | SF | 4,399 | 1.25 | 5,499 |
| 150 | Break-out and remove existing concrete steps | SF | 230 | 3.00 | 690 |
| 151 | Break-out and remove existing concrete helipad | SF | 3,050 | 3.75 | 11,438 |
| 149 | Break-out and remove existing loading dock | SF | 561 | 2.00 | 1,122 |
| 140 | Remove and dispose existing sign posts | EA | 80 | 50.00 | 4,000 |
| 142 | Remove and dispose existing flag pole | EA | 1 | 150.00 | 150 |
| 143 | Remove and dispose existing railing | LF | 102 | 15.00 | 1,530 |
| 152 | Remove and dispose of existing helipad safety netting | LF | 128 | 10.00 | 1,280 |
| 139 | Relocate existing dumpster | EA | 2 | 500.00 | 1,000 |
| 192 | Relocate existing site bollard; generator enclosure | EA | 12 | 500.00 | 6,000 |
| 185 | Relocate existing site signage | Item | | | 5,000 |
| 186 | Relocate existing building mounted wind vane | Item | | | 500 |
| 153 | Scarify existing parking pavement | SF | 26,910 | 0.50 | 13,455 |
| 168 | Allowance for miscellaneous site demolition not identified | Item | | | 25,000 |
| | ***Site Demolition and Relocations*** | | | ***$1.29/SF*** | ***$209,914*** |
| **G1040** | **Hazardous Waste Remediation** | | | | |
| 170 | Allowance for removal and treatment of contaminated soil | Item | | | Excl. |
| | ***Hazardous Waste Remediation*** | | | | |
| | ***Existing Conditions*** | | | ***$8.42/SF*** | ***$1,375,037*** |

# Medstar Southern Maryland Hospital - Addition / Renovation

## Preliminary Design Cost Estimate - Option A

Gross Floor Area: 163,328 SF
Rates Current At August 2013

Divisions/Elements/Item

| Description | Unit | Qty | Rate | Total Cost |
|---|---|---|---|---|
| **03 Concrete** | | | | |
| **A1010 Standard Foundations** | | | | |
| 1 Reinforced concrete strip footing; allow 72" x 12" (retaining wall) | LF | 301 | 100.00 | 30,100 |
| 2 Reinforced concrete grade beam; allow 36" x 12" (perimeter) | LF | 829 | 50.00 | 41,450 |
| 3 Reinforced concrete spread footing; allow 36" x 36" x 18" | EA | 16 | 350.00 | 5,600 |
| 4 Reinforced concrete spread footing; allow 60" x 60" x 24" | EA | 93 | 1,000.00 | 93,000 |
| ***Standard Foundations*** | | | ***$1.04/SF*** | ***$170,150*** |
| **A1030 Slab on Grade** | | | | |
| 7 Reinforced concrete slab on grade; allow 6" thick | SF | 44,619 | 8.00 | 356,952 |
| ***Slab on Grade*** | | | ***$2.19/SF*** | ***$356,952*** |
| **A2020 Basement Walls** | | | | |
| 18 Reinforced concrete retaining wall; allow 18" thick | SF | 6,020 | 40.00 | 240,800 |
| 17 Reinforced concrete foundation wall; allow 10" thick | SF | 3,316 | 30.00 | 99,480 |
| 57 Allowance for elevator pit | EA | 5 | 10,000.00 | 50,000 |
| ***Basement Walls*** | | | ***$2.39/SF*** | ***$390,280*** |
| **B1010 Floor Construction** | | | | |
| 11 Reinforced concrete column; allow 24" x 24" | LF | 1,860 | 150.00 | 279,000 |
| 8 Reinforced concrete suspended floor slab; allow 8" thick | SF | 39,146 | 25.00 | 978,650 |
| 157 Reinforced concrete beams | SF | 39,146 | 2.00 | 78,292 |
| ***Floor Construction*** | | | ***$8.18/SF*** | ***$1,335,942*** |
| **B1020 Roof Construction** | | | | |
| 12 Reinforced concrete column; allow 18" x 18" | LF | 240 | 100.00 | 24,000 |
| 10 Reinforced concrete column; allow 24" x 24" | LF | 1,395 | 150.00 | 209,250 |
| 9 Reinforced concrete suspended roof slab; allow 8" thick | SF | 44,619 | 25.00 | 1,115,475 |
| 158 Reinforced concrete beams | SF | 44,619 | 2.00 | 89,238 |
| ***Roof Construction*** | | | ***$8.80/SF*** | ***$1,437,963*** |
| **B2010 Exterior Walls** | | | | |
| 212 Reinforced concrete loading dock wall; 10" thick | SF | 360 | 30.00 | 10,800 |
| ***Exterior Walls*** | | | ***$0.07/SF*** | ***$10,800*** |
| ***Concrete*** | | | ***$22.67/SF*** | ***$3,702,087*** |
| **04 Masonry** | | | | |
| **B2010 Exterior Walls** | | | | |
| 20 Face brick veneer | SF | 33,640 | 30.00 | 1,009,200 |

# Medstar Southern Maryland Hospital - Addition / Renovation
## Preliminary Design Cost Estimate - Option A

Gross Floor Area: 163,328 SF
Rates Current At August 2013

Divisions/Elements/Item

| Description | | Unit | Qty | Rate | Total Cost |
|---|---|---|---|---|---|
| 19 | Face brick veneer to exposed retaining wall | SF | 3,620 | 30.00 | 108,600 |
| | ***Exterior Walls*** | | | ***$6.84/SF*** | ***$1,117,800*** |
| | ***Masonry*** | | | ***$6.84/SF*** | ***$1,117,800*** |
| **05** | **Metals** | | | | |
| **C1030** | **Fittings** | | | | |
| 101 | Allowance for loading dock ramp, including guardrail | SF | 150 | 150.00 | 22,500 |
| 136 | Allowance for miscellaneous metals / equipment supports | SF | 158,389 | 0.50 | 79,195 |
| | ***Fittings*** | | | ***$0.62/SF*** | ***$101,695*** |
| **C2010** | **Stair Construction** | | | | |
| 56 | Metal pan stair with concrete filled treads and landings, including guardrails | FT/R | 50 | 1,200.00 | 60,000 |
| 102 | Metal grate stair to loading dock; approx. 3'-0" rise | Item | | | 2,500 |
| | ***Stair Construction*** | | | ***$0.38/SF*** | ***$62,500*** |
| | ***Metals*** | | | ***$1.01/SF*** | ***$164,195*** |
| **06** | **Wood, Plastics, and Composites** | | | | |
| **C1030** | **Fittings** | | | | |
| 40 | Allowance for rough carpentry | SF | 158,389 | 0.50 | 79,195 |
| 41 | Allowance for wood blocking | SF | 158,389 | 1.00 | 158,389 |
| | ***Fittings*** | | | ***$1.45/SF*** | ***$237,584*** |
| | ***Wood, Plastics, and Composites*** | | | ***$1.45/SF*** | ***$237,584*** |
| **07** | **Thermal and Moisture Protection** | | | | |
| **A1030** | **Slab on Grade** | | | | |
| 37 | Vapor barrier | SF | 44,619 | 0.50 | 22,310 |
| 38 | Rigid insulation; allow 2" thick | SF | 44,619 | 2.00 | 89,238 |
| 14 | Expansion joint to existing slab on grade | LF | 905 | 75.00 | 67,875 |
| | ***Slab on Grade*** | | | ***$1.10/SF*** | ***$179,423*** |
| **A2020** | **Basement Walls** | | | | |
| 35 | Waterproofing membrane to sub-grade walls | SF | 9,336 | 5.00 | 46,680 |
| 36 | Rigid insulation to sub-grade walls; allow 2" thick | SF | 9,336 | 2.00 | 18,672 |
| 34 | Drainage mat / protection board to retaining wall | SF | 6,020 | 5.00 | 30,100 |
| | ***Basement Walls*** | | | ***$0.58/SF*** | ***$95,452*** |
| **B1010** | **Floor Construction** | | | | |
| 16 | Expansion joint to existing suspended floor slab | LF | 10 | 75.00 | 750 |
| 27 | Fire-proofing - Excluded (assume not required) | SF | 39,146 | | Excl. |
| | ***Floor Construction*** | | | ***$0.01/SF*** | ***$750*** |

# Medstar Southern Maryland Hospital - Addition / Renovation
## Preliminary Design Cost Estimate - Option A

Divisions/Elements/Item

Gross Floor Area: 163,328 SF
Rates Current At August 2013

| Description | | Unit | Qty | Rate | Total Cost |
|---|---|---|---|---|---|
| **B1020** | **Roof Construction** | | | | |
| 15 | Expansion joint to existing suspended roof slab | LF | 494 | 75.00 | 37,050 |
| 28 | Fire-proofing - Excluded (assume not required) | SF | 44,619 | | Excl. |
| | ***Roof Construction*** | | | ***$0.23/SF*** | ***$37,050*** |
| **B2010** | **Exterior Walls** | | | | |
| 24 | Exterior wall backup, including plywood sheathing, rigid insulation, and vapor barrier | SF | 33,640 | 12.00 | 403,680 |
| 13 | Expansion joint to existing facade | LF | 130 | 75.00 | 9,750 |
| | ***Exterior Walls*** | | | ***$2.53/SF*** | ***$413,430*** |
| **B3010** | **Roof Coverings** | | | | |
| 26 | Single-ply roofing membrane to concrete roof slab | SF | 44,619 | 8.00 | 356,952 |
| | ***Roof Coverings*** | | | ***$2.19/SF*** | ***$356,952*** |
| **C1030** | **Fittings** | | | | |
| 42 | Allowance for miscellaneous fire-stopping | SF | 158,389 | 1.00 | 158,389 |
| 43 | Allowance for miscellaneous caulking and sealing | SF | 158,389 | 1.00 | 158,389 |
| | ***Fittings*** | | | ***$1.94/SF*** | ***$316,778*** |
| | ***Thermal and Moisture Protection*** | | | ***$8.57/SF*** | ***$1,399,835*** |
| **08** | **Openings** | | | | |
| **B2010** | **Exterior Walls** | | | | |
| 99 | Glazed storefront entry facade | SF | 1,215 | 100.00 | 121,500 |
| | ***Exterior Walls*** | | | ***$0.74/SF*** | ***$121,500*** |
| **B2020** | **Exterior Windows** | | | | |
| 21 | Exterior window unit | SF | 2,724 | 100.00 | 272,400 |
| | ***Exterior Windows*** | | | ***$1.67/SF*** | ***$272,400*** |
| **B2030** | **Exterior Doors** | | | | |
| 70 | Double leaf glass entry door, including frame, finish and hardware | Pr | 3 | 6,000.00 | 18,000 |
| 63 | Double leaf door, including frame, finish and hardware | Pr | 4 | 3,200.00 | 12,800 |
| 65 | Single leaf door, including frame, finish and hardware | EA | 7 | 1,800.00 | 12,600 |
| 64 | Overhead coiling roller door, including frame, finish and hardware | EA | 2 | 7,500.00 | 15,000 |
| | ***Exterior Doors*** | | | ***$0.36/SF*** | ***$58,400*** |
| **C1010** | **Partitions** | | | | |
| 62 | Glazed vesitbule partition | SF | 420 | 50.00 | 21,000 |
| 175 | Interior window unit / viewing panel | SF | 4,802 | 50.00 | 240,100 |
| | ***Partitions*** | | | ***$1.60/SF*** | ***$261,100*** |

# Medstar Southern Maryland Hospital - Addition / Renovation
## Preliminary Design Cost Estimate - Option A

Divisions/Elements/Item

Gross Floor Area: 163,328 SF
Rates Current At August 2013

| Description | | Unit | Qty | Rate | Total Cost |
|---|---|---|---|---|---|
| **C1020** | **Interior Doors** | | | | |
| 71 | Double leaf glass entry door, including frame, finish and hardware | Pr | 1 | 5,500.00 | 5,500 |
| 66 | Double leaf door, including frame, finish and hardware | Pr | 25 | 3,200.00 | 80,000 |
| 67 | Single leaf door, including frame, finish and hardware | EA | 356 | 1,800.00 | 640,800 |
| 68 | Single leaf fire-rated door, including frame, finish and hardware | EA | 14 | 2,500.00 | 35,000 |
| 72 | Re-paint existing double leaf door and frame | Pr | 3 | 150.00 | 450 |
| 69 | Re-paint existing single leaf door and frame | EA | 28 | 75.00 | 2,100 |
| 214 | Allowance for hospital grade doors and hardware | SF | 158,389 | 1.50 | 237,584 |
| | ***Interior Doors*** | | | ***$6.13/SF*** | ***$1,001,434*** |
| | ***Openings*** | | | ***$10.50/SF*** | ***$1,714,834*** |
| **09** | **Finishings** | | | | |
| **B2010** | **Exterior Walls** | | | | |
| 22 | Gypboard wall lining to metal stud framing | SF | 33,640 | 1.75 | 58,870 |
| 23 | Gypboard wall lining on furring channel; retaining wall | SF | 2,400 | 4.25 | 10,200 |
| | ***Exterior Walls*** | | | ***$0.42/SF*** | ***$69,070*** |
| **C1010** | **Partitions** | | | | |
| 58 | Gypboard partition | SF | 171,315 | 8.00 | 1,370,520 |
| 59 | Gypboard partition; fire-rated | SF | 20,730 | 10.00 | 207,300 |
| 60 | Allowance to repair existing exterior wall as new partition | SF | 9,510 | 5.00 | 47,550 |
| | ***Partitions*** | | | ***$9.95/SF*** | ***$1,625,370*** |
| **C2020** | **Stair Finishes** | | | | |
| 51 | Concrete floor sealer to treads and landings | SF | 2,294 | 2.00 | 4,588 |
| | ***Stair Finishes*** | | | ***$0.03/SF*** | ***$4,588*** |
| **C3010** | **Wall Finishes** | | | | |
| 133 | Wall tile; public restroom | SF | 6,012 | 18.00 | 108,216 |
| 134 | Protective wall covering; corridors | SF | 32,952 | 7.50 | 247,140 |
| 92 | Full height wall mirror; gym | SF | 1,860 | 30.00 | 55,800 |
| 176 | Lead-lining to medical procedure room | SF | 7,080 | 25.00 | 177,000 |
| 61 | Paint finish to gypboard; partition lining | SF | 403,110 | 1.00 | 403,110 |
| 25 | Paint finish to gypboard; exterior wall lining | SF | 33,640 | 1.00 | 33,640 |
| 91 | Re-paint existing gypboard partition lining | SF | 11,295 | 1.50 | 16,943 |
| | ***Wall Finishes*** | | | ***$6.38/SF*** | ***$1,041,849*** |
| **C3020** | **Floor Finishes** | | | | |
| 44 | Sheet vinyl flooring, including base | SF | 131,146 | 8.00 | 1,049,168 |
| 49 | Floor tile, including base (public / staff restrooms) | SF | 3,110 | 16.00 | 49,760 |
| 47 | Feature floor tile, including base (ground floor lobby) | SF | 3,431 | 20.00 | 68,620 |

# Medstar Southern Maryland Hospital - Addition / Renovation
## Preliminary Design Cost Estimate - Option A

Divisions/Elements/Item

Gross Floor Area: 163,328 SF
Rates Current At August 2013

| Description | | Unit | Qty | Rate | Total Cost |
|---|---|---|---|---|---|
| 48 | Feature floor tile, including base (chapel / retail) | SF | 2,790 | 20.00 | 55,800 |
| 50 | Rubber sports flooring, including base (rehabilitation gym) | SF | 3,977 | 15.00 | 59,655 |
| 45 | Concrete floor sealer, including base | SF | 6,702 | 1.20 | 8,042 |
| 46 | Exposed concrete - no finish required | SF | 4,939 | | Excl. |
| | ***Floor Finishes*** | | | ***$7.90/SF*** | ***$1,291,045*** |
| **C3030** | **Ceiling Finishes** | | | | |
| 52 | ACT Ceiling system | SF | 130,416 | 5.50 | 717,288 |
| 53 | Gypboard ceiling; allow 10% of ceiling area | SF | 16,333 | 12.00 | 195,996 |
| 177 | Lead-lining to medical procedure room | SF | 2,752 | 30.00 | 82,560 |
| 54 | Paint finish to gypboard | SF | 16,333 | 1.20 | 19,600 |
| 55 | Paint finish to underside of exposed structure | SF | 11,641 | 1.50 | 17,462 |
| | ***Ceiling Finishes*** | | | ***$6.32/SF*** | ***$1,032,906*** |
| | ***Finishings*** | | | ***$31.01/SF*** | ***$5,064,828*** |
| **10** | **Specialties** | | | | |
| **C1030** | **Fittings** | | | | |
| 88 | Crash / bumper rail; corridors | LF | 8,238 | 40.00 | 329,520 |
| 89 | Corner guard; corridors | EA | 181 | 200.00 | 36,200 |
| 84 | Allowance for staff locker | EA | 60 | 300.00 | 18,000 |
| 87 | Allowance for fire extinguishers | EA | 39 | 350.00 | 13,650 |
| 108 | Allowance for janitor accessories | EA | 6 | 1,500.00 | 9,000 |
| 85 | Allowance for interior code signage | SF | 158,389 | 0.75 | 118,792 |
| 95 | Allowance for interior directional signage | SF | 158,389 | 1.00 | 158,389 |
| 86 | Allowance for exterior building signage | Item | | | 50,000 |
| 109 | Medical; allowance for miscellaneous fittings and accessories (procedural room) | EA | 17 | 7,500.00 | 127,500 |
| 110 | Medical; allowance for miscellaneous fittings and accessories (decon / ante / anest.) | EA | 4 | 7,500.00 | 30,000 |
| 111 | Medical; allowance for miscellaneous fittings and accessories (exam / prep room) | EA | 44 | 5,000.00 | 220,000 |
| 112 | Medical; allowance for miscellaneous fittings and accessories (patient room) | EA | 116 | 5,000.00 | 580,000 |
| 113 | Medical; allowance for miscellaneous fittings and accessories (nursery) | EA | 1 | 5,000.00 | 5,000 |
| 114 | Medical Support; allowance for miscellaneous fittings and accessories (support / admin / office) | EA | 25 | 2,500.00 | 62,500 |
| 115 | Medical Support; allowance for miscellaneous fittings and accessories (soiled / linen / clean) | EA | 14 | 5,000.00 | 70,000 |
| 116 | Medical Support; allowance for miscellaneous fittings and accessories (nurse station) | EA | 17 | 1,000.00 | 17,000 |
| 117 | Amenities / Staff; allowance for miscellaneous fittings and accessories (restroom) | EA | 98 | 2,500.00 | 245,000 |

# Medstar Southern Maryland Hospital - Addition / Renovation
## Preliminary Design Cost Estimate - Option A

Divisions/Elements/Item

Gross Floor Area: 163,328 SF
Rates Current At August 2013

| Description | | Unit | Qty | Rate | Total Cost |
|---|---|---|---|---|---|
| 118 | Amenities / Staff; allowance for miscellaneous fittings and accessories (staff room) | EA | 3 | 2,500.00 | 7,500 |
| 119 | Amenities / Staff; allowance for miscellaneous fittings and accessories (locker room) | EA | 2 | 5,000.00 | 10,000 |
| 120 | Amenities / Staff; allowance for miscellaneous fittings and accessories (nourishment) | EA | 4 | 5,000.00 | 20,000 |
| 121 | Amenities / Staff; allowance for miscellaneous fittings and accessories (gym) | EA | 1 | 10,000.00 | 10,000 |
| 122 | Amenities / Staff; allowance for miscellaneous fittings and accessories (lounge / comfort) | EA | 3 | 5,000.00 | 15,000 |
| 123 | Amenities / Staff; allowance for miscellaneous fittings and accessories (janitor / housekeeping) | EA | 6 | 2,500.00 | 15,000 |
| 124 | Storage / Plant; allowance for miscellaneous fittings and accessories (storage / med supply) | EA | 21 | 2,500.00 | 52,500 |
| 125 | Storage / Plant; allowance for miscellaneous fittings and accessories (plant room) | EA | 6 | 500.00 | 3,000 |
| 126 | Storage / Plant; allowance for miscellaneous fittings and accessories (dirty / clean / cart wash) | EA | 2 | 5,000.00 | 10,000 |
| 127 | Storage / Plant; allowance for miscellaneous fittings and accessories (shipping / receiving) | EA | 1 | 2,500.00 | 2,500 |
| 128 | Other; allowance for miscellaneous fittings and accessories (vestibule / waiting area) | EA | 6 | 10,000.00 | 60,000 |
| 129 | Other; allowance for miscellaneous fittings and accessories (shell) | EA | 1 | | Excl. |
| | ***Fittings*** | | | ***$14.06/SF*** | ***$2,296,051*** |
| | ***Specialties*** | | | ***$14.06/SF*** | ***$2,296,051*** |
| **11** | **Equipment** | | | | |
| **E1010** | **Commercial Equipment** | | | | |
| 82 | Appliances to staff room; including refrigerator, dishwasher, and microwave | EA | 3 | 2,500.00 | 7,500 |
| 83 | Appliances to nourishment area; including refrigerator, and microwave | EA | 4 | 1,500.00 | 6,000 |
| 94 | Food service equipment - Excluded (furnished and installed by Owner) | Item | | | Excl. |
| | ***Commercial Equipment*** | | | ***$0.08/SF*** | ***$13,500*** |
| **E1020** | **Institutional Equipment** | | | | |
| 93 | Medical equipment - Excluded (furnished an installed by Owner) | Item | | | Excl. |
| 90 | Gym equipment - Excluded (assume by Owner) | Item | | | Excl. |
| | ***Institutional Equipment*** | | | | |

# Medstar Southern Maryland Hospital - Addition / Renovation
## Preliminary Design Cost Estimate - Option A

Gross Floor Area: 163,328 SF
Rates Current At August 2013

Divisions/Elements/Item

| Description | | Unit | Qty | Rate | Total Cost |
|---|---|---|---|---|---|
| **E1030** | **Vehicular Equipment** | | | | |
| 100 | Dock bumper | EA | 20 | 250.00 | 5,000 |
| | ***Vehicular Equipment*** | | | ***$0.03/SF*** | ***$5,000*** |
| | ***Equipment*** | | | ***$0.11/SF*** | ***$18,500*** |
| **12** | **Furnishings** | | | | |
| **E2010** | **Fixed Furnishings** | | | | |
| 73 | Casework; base cabinet unit (nourishment) | LF | 80 | 450.00 | 36,000 |
| 74 | Casework; base cabinet unit (staff room) | LF | 63 | 350.00 | 22,050 |
| 96 | Casework; base cabinet unit (patient lounge) | LF | 30 | 350.00 | 10,500 |
| 106 | Casework; base cabinet unit to exam / prep room (allow 6'-0" per room) | LF | 264 | 450.00 | 118,800 |
| 75 | Casework; nurse station desk | LF | 851 | 500.00 | 425,500 |
| 76 | Casework; overhead cabinet unit (nourishment) | LF | 80 | 250.00 | 20,000 |
| 77 | Casework; overhead cabinet unit (kitchen) | LF | 63 | 200.00 | 12,600 |
| 107 | Casework; overhead cabinet unit to exam / prep room (allow 6'-0" per room) | LF | 264 | 250.00 | 66,000 |
| 105 | Commercial fit-out to retail spaces - Excluded (by Owner) | Item | | | Excl. |
| 98 | Allowance for main reception desk | Item | | | 10,000 |
| 137 | Allowance for miscellaneous casework not identified | SF | 158,389 | 1.00 | 158,389 |
| | ***Fixed Furnishings*** | | | ***$5.39/SF*** | ***$879,839*** |
| **E2020** | **Movable Furnishings** | | | | |
| 97 | FF&E - Excluded (by Owner) | Item | | | Excl. |
| 103 | Loose furniture and equipment to waiting / lobby areas - Excluded (by Owner) | Item | | | Excl. |
| 104 | Loose furniture and equipment to patient / staff lounge - Excluded (by Owner) | Item | | | Excl. |
| 138 | Loose medical equipment, casework, and furniture - Excluded (by Owner) | Item | | | Excl. |
| | ***Movable Furnishings*** | | | | |
| | ***Furnishings*** | | | ***$5.39/SF*** | ***$879,839*** |
| **13** | **Special Construction** | | | | |
| **F1030** | **Special Construction Systems** | | | | |
| 78 | Lobby; allowance for complete fit-out, including partitions, doors, casework, fittings and accessories | SF | 3,431 | 10.00 | 34,310 |
| 79 | Admin / Security Offices; allowance for complete fit-out, including partitions, doors, casework, fittings and accessories | SF | 5,256 | 25.00 | 131,400 |
| 80 | Chapel / Retail; allowance for complete fit-out, including partitions, doors, casework, fittings and accessories | SF | 2,790 | 50.00 | 139,500 |

# Medstar Southern Maryland Hospital - Addition / Renovation
## Preliminary Design Cost Estimate - Option A

Divisions/Elements/Item

Gross Floor Area: 163,328 SF
Rates Current At August 2013

| Description | Unit | Qty | Rate | Total Cost |
|---|---|---|---|---|
| 81 Family Waiting / Consultation; allowance for complete fit-out, including partitions, doors, casework, fittings and accessories | SF | 3,945 | 25.00 | 98,625 |
| ***Special Construction Systems*** | | | ***$2.47/SF*** | ***$403,835*** |
| ***Special Construction*** | | | ***$2.47/SF*** | ***$403,835*** |
| **14 Conveying Equipment** | | | | |
| **D1010 Elevators & Lifts** | | | | |
| 210 (2) Stop passenger elevator; staff | EA | 1 | 100,000.00 | 100,000 |
| 211 (2) Stop passenger elevator; emergency department | EA | 4 | 100,000.00 | 400,000 |
| ***Elevators & Lifts*** | | | ***$3.06/SF*** | ***$500,000*** |
| ***Conveying Equipment*** | | | ***$3.06/SF*** | ***$500,000*** |
| **21 Fire Suppression** | | | | |
| **D4010 Sprinklers** | | | | |
| 198 Additional areas | SF | 78,826 | 3.90 | 307,421 |
| 199 Renovated areas | SF | 79,563 | 3.90 | 310,296 |
| 215 Shell space | SF | 4,939 | 3.90 | 19,262 |
| ***Sprinklers*** | | | ***$3.90/SF*** | ***$636,979*** |
| ***Fire Suppression*** | | | ***$3.90/SF*** | ***$636,979*** |
| **22 Plumbing** | | | | |
| **D2090 Other Plumbing Systems** | | | | |
| 196 Additional areas | SF | 78,826 | 23.00 | 1,812,998 |
| 197 Renovated areas | SF | 79,563 | 23.00 | 1,829,949 |
| 216 Shell space | SF | 4,939 | | Excl. |
| ***Other Plumbing Systems*** | | | ***$22.30/SF*** | ***$3,642,947*** |
| ***Plumbing*** | | | ***$22.30/SF*** | ***$3,642,947*** |
| **23 Heating, Ventilating, and Air Conditioning** | | | | |
| **D3090 Other HVAC Systems & Equipment** | | | | |
| 200 Additional areas | SF | 78,826 | 59.00 | 4,650,734 |
| 201 Renovated areas | SF | 79,563 | 59.00 | 4,694,217 |
| 217 Shell space | SF | 4,939 | | Excl. |
| ***Other HVAC Systems & Equipment*** | | | ***$57.22/SF*** | ***$9,344,951*** |
| ***Heating, Ventilating, and Air Conditioning*** | | | ***$57.22/SF*** | ***$9,344,951*** |
| **25 Integrated Automation** | | | | |
| **D3060 Controls & Instrumentations** | | | | |
| 202 Additional areas | SF | 78,826 | | Incl. |
| 203 Renovated areas | SF | 79,563 | | Incl. |

# Medstar Southern Maryland Hospital - Addition / Renovation
## Preliminary Design Cost Estimate - Option A

Divisions/Elements/Item

Gross Floor Area: 163,328 SF
Rates Current At August 2013

| Description | Unit | Qty | Rate | Total Cost |
|---|---|---|---|---|
| 218 Shell space | SF | 4,939 | | Excl. |
| ***Controls & Instrumentations*** | | | | |
| ***Integrated Automation*** | | | | |
| **26 Electrical** | | | | |
| **D5090 Other Electrical Systems** | | | | |
| 204 Additional areas | SF | 78,826 | 36.00 | 2,837,736 |
| 205 Renovated areas | SF | 79,563 | 36.00 | 2,864,268 |
| 219 Shell space | SF | 4,939 | | Excl. |
| ***Other Electrical Systems*** | | | ***$34.91/SF*** | ***$5,702,004*** |
| ***Electrical*** | | | ***$34.91/SF*** | ***$5,702,004*** |
| **27 Communications** | | | | |
| **D5030 Communications & Security** | | | | |
| 206 Additional areas | SF | 78,826 | 13.00 | 1,024,738 |
| 207 Renovated areas | SF | 79,563 | 13.00 | 1,034,319 |
| 220 Shell space | SF | 4,939 | | Excl. |
| ***Communications & Security*** | | | ***$12.61/SF*** | ***$2,059,057*** |
| ***Communications*** | | | ***$12.61/SF*** | ***$2,059,057*** |
| **28 Electronic Safety and Security** | | | | |
| **D5030 Communications & Security** | | | | |
| 208 Additional areas | SF | 78,826 | 11.00 | 867,086 |
| 209 Renovated areas | SF | 79,563 | 11.00 | 875,193 |
| 221 Shell space | SF | 4,939 | 2.00 | 9,878 |
| ***Communications & Security*** | | | ***$10.73/SF*** | ***$1,752,157*** |
| ***Electronic Safety and Security*** | | | ***$10.73/SF*** | ***$1,752,157*** |
| **31 Earthwork** | | | | |
| **A1020 Special Foundations** | | | | |
| 213 Deep foundation system - Excluded | Item | | | Excl. |
| ***Special Foundations*** | | | | |
| **A1030 Slab on Grade** | | | | |
| 178 Imported granular fill as sub-base | CY | 1,377 | 30.00 | 41,310 |
| 179 Trim and compact subgrade | SF | 44,619 | 0.25 | 11,155 |
| ***Slab on Grade*** | | | ***$0.32/SF*** | ***$52,465*** |
| **G1030 Site Earthwork** | | | | |
| 160 Imported fill to proposed levels | CY | 9,516 | 35.00 | 333,060 |
| 161 Mass excavation to proposed levels | CY | 1,530 | 6.00 | 9,180 |

# Medstar Southern Maryland Hospital - Addition / Renovation
## Preliminary Design Cost Estimate - Option A

Divisions/Elements/Item

Gross Floor Area: 163,328 SF
Rates Current At August 2013

| Description | | Unit | Qty | Rate | Total Cost |
|---|---|---|---|---|---|
| 162 | Remove and dispose excavated spoil from site | CY | 1,530 | 15.00 | 22,950 |
| 39 | Subsoil drain to retaining / foundation wall | LF | 1,130 | 18.00 | 20,340 |
| 163 | Allowance for fine grading | SF | 107,901 | 0.25 | 26,975 |
| 172 | Construction entrance | EA | 2 | 5,000.00 | 10,000 |
| 173 | Dust control | Item | | | 10,000 |
| 174 | Allowance for soil erosion and sediment controls | Item | | | 20,000 |
| | ***Site Earthwork*** | | | ***$2.77/SF*** | ***$452,505*** |
| **G2050** | **Landscaping** | | | | |
| 166 | Imported planting material | CY | 1,483 | 35.00 | 51,905 |
| | ***Landscaping*** | | | ***$0.32/SF*** | ***$51,905*** |
| | ***Earthwork*** | | | ***$3.41/SF*** | ***$556,875*** |
| **32** | **Exterior Improvements** | | | | |
| **G2020** | **Parking Lots** | | | | |
| 154 | Bituminous concrete pavement, including sub-base | SY | 6,305 | 30.00 | 189,150 |
| 155 | Bituminous top and finish course to existing pavement | SY | 2,990 | 20.00 | 59,800 |
| 156 | Concrete curb and gutter | LF | 2,722 | 30.00 | 81,660 |
| 159 | Allowance for pavement markings | SF | 59,459 | 0.15 | 8,919 |
| | ***Parking Lots*** | | | ***$2.08/SF*** | ***$339,529*** |
| **G2030** | **Pedestrian Paving** | | | | |
| 182 | Reinforced concrete pavement; allow 6" thick | SF | 9,605 | 9.00 | 86,445 |
| | ***Pedestrian Paving*** | | | ***$0.53/SF*** | ***$86,445*** |
| **G2040** | **Site Development** | | | | |
| 165 | Reinforced concrete site retaining wall, including footing | SF | 2,960 | 50.00 | 148,000 |
| 164 | Reinforced concrete helipad | SF | 3,141 | 15.00 | 47,115 |
| 184 | Reinforced concrete equipment pad; transformers (2) | Item | | | 3,000 |
| 188 | Reinforced concrete equipment pad; propane / oxygen tanks (2) | Item | | | 3,000 |
| 189 | Reinforced concrete equipment pad; generator | Item | | | 1,050 |
| 190 | Chain link plant enclosure; propane / oxygen tanks | LF | 100 | 45.00 | 4,500 |
| 191 | Chain link plant enclosure; generator | LF | 100 | 45.00 | 4,500 |
| 187 | Linemarking to helipad | Item | | | 1,500 |
| 180 | Allowance for modular retaining wall to helipad | SF | 1,218 | 25.00 | 30,450 |
| 181 | Allowance for helipad safety net including structrual framing | SF | 870 | 40.00 | 34,800 |
| 193 | Allowance for new entry canopy | SF | 1,700 | 50.00 | 85,000 |
| 183 | Allowance for miscellaneous site furniture | Item | | | 10,000 |
| | ***Site Development*** | | | ***$2.28/SF*** | ***$372,915*** |
| **G2050** | **Landscaping** | | | | |
| 167 | Allowance for landscaping; seeding | SF | 9,605 | 0.35 | 3,362 |

# Medstar Southern Maryland Hospital - Addition / Renovation
## Preliminary Design Cost Estimate - Option A

Gross Floor Area: 163,328 SF
Rates Current At August 2013

Divisions/Elements/Item

| Description | | Unit | Qty | Rate | Total Cost |
|---|---|---|---|---|---|
| 194 | Allowance for landscaping; plantings | SF | 28,814 | 5.00 | 144,070 |
| 195 | Allowance for landscaping; trees | EA | 5 | 1,500.00 | 7,500 |
| | ***Landscaping*** | | | ***$0.95/SF*** | ***$154,932*** |
| | ***Exterior Improvements*** | | | ***$5.84/SF*** | ***$953,821*** |
| **33** | **Utilities** | | | | |
| **G1020** | **Site Demolition and Relocations** | | | | |
| 141 | Remove and dispose existing light post | EA | 16 | 500.00 | 8,000 |
| 130 | Relocate existing transformers | Item | | | 25,000 |
| 135 | Relocate existing generator | Item | | | 15,000 |
| 131 | Relocate existing propane and oxygen tanks | Item | | | 10,000 |
| 222 | Replacement of existing transformers, generator, oxygen / propane tanks, etc - Excluded (assume not required) | Item | | | Excl. |
| 223 | Site pole lighting | EA | 16 | 5,000.00 | 80,000 |
| 224 | Allowance to re-work existing site storm drainage | SF | 95,164 | 1.00 | 95,164 |
| 132 | Allowance for site utilities diversions not identified | Item | | | 150,000 |
| | ***Site Demolition and Relocations*** | | | ***$2.35/SF*** | ***$383,164*** |
| | ***Utilities*** | | | ***$2.35/SF*** | ***$383,164*** |
| | ***ESTIMATED NET COST*** | | | ***$268.82/SF*** | ***$43,906,380*** |

# 4.0 ESTIMATE DETAIL - Option B

# Medstar Southern Maryland Hospital - Addition / Renovation

## Preliminary Design Cost Estimate - Option B

Location Summary

GFA: Gross Floor Area
Rates Current At August 2013

| Location | | GFA SF | Cost/SF | Total Cost |
|---|---|---|---|---|
| **ALL ALL LOCATIONS** | | **155,153** | **278.88** | **43,269,579** |
| | **ESTIMATED NET COST** | **155,153** | **$278.88** | **$43,269,579** |
| **MARGINS & ADJUSTMENTS** | | | | |
| Phasing / Temporary Works | 5.0 % | | | $2,163,479 |
| General Conditions | 9.0 % | | | $4,088,975 |
| Bonds and Insurances | 3.0 % | | | $1,485,661 |
| Overhead and Profit | 4.5 % | | | $2,295,346 |
| Design / Estimating Contingency | 15.0 % | | | $7,995,456 |
| Escalation | 15.0 % | | | $9,201,504 |
| | **ESTIMATED TOTAL COST** | **155,153** | **$454.39** | **$70,500,000** |

# Medstar Southern Maryland Hospital - Addition / Renovation

## Preliminary Design Cost Estimate - Option B

Divisions/Elements Summary

Gross Floor Area: 155,153 SF
Rates Current At August 2013

| Description | | Cost/SF | Total Cost |
|---|---|---|---|
| **02 Existing Conditions** | | | |
| F2010 | Building Elements Demolition | 3.02 | 469,178 |
| F2020 | Hazardous Components Abatement | 1.80 | 279,020 |
| G1010 | Site Clearing | 0.16 | 25,000 |
| G1020 | Site Demolition and Relocations | 1.35 | 209,914 |
| G1040 | Hazardous Waste Remediation | | |
| | ***Existing Conditions*** | ***$6.34*** | ***$983,112*** |
| **03 Concrete** | | | |
| A1010 | Standard Foundations | 1.41 | 219,400 |
| A1030 | Slab on Grade | 2.25 | 348,628 |
| A2020 | Basement Walls | 2.29 | 355,680 |
| B1010 | Floor Construction | 14.81 | 2,297,958 |
| B1020 | Roof Construction | 9.36 | 1,452,438 |
| B2010 | Exterior Walls | 0.07 | 10,800 |
| | ***Concrete*** | ***$30.20*** | ***$4,684,904*** |
| **04 Masonry** | | | |
| B2010 | Exterior Walls | 8.90 | 1,380,600 |
| | ***Masonry*** | ***$8.90*** | ***$1,380,600*** |
| **05 Metals** | | | |
| C1030 | Fittings | 0.63 | 97,607 |
| C2010 | Stair Construction | 0.63 | 98,500 |
| | ***Metals*** | ***$1.26*** | ***$196,107*** |
| **06 Wood, Plastics, and Composites** | | | |
| C1030 | Fittings | 1.45 | 225,321 |
| | ***Wood, Plastics, and Composites*** | ***$1.45*** | ***$225,321*** |
| **07 Thermal and Moisture Protection** | | | |
| A1030 | Slab on Grade | 1.05 | 162,193 |
| A2020 | Basement Walls | 0.58 | 89,712 |
| B1010 | Floor Construction | | |
| B1020 | Roof Construction | 0.24 | 37,050 |
| B2010 | Exterior Walls | 3.31 | 514,050 |
| B3010 | Roof Coverings | 2.16 | 334,696 |
| C1030 | Fittings | 1.94 | 300,428 |
| | ***Thermal and Moisture Protection*** | ***$9.27*** | ***$1,438,129*** |
| **08 Openings** | | | |
| B2010 | Exterior Walls | 0.78 | 121,500 |
| B2020 | Exterior Windows | 2.27 | 352,200 |
| B2030 | Exterior Doors | 0.38 | 58,400 |
| C1010 | Partitions | 1.58 | 245,550 |

# Medstar Southern Maryland Hospital - Addition / Renovation

## Preliminary Design Cost Estimate - Option B

Divisions/Elements Summary

Gross Floor Area: 155,153 SF
Rates Current At August 2013

| Description | | Cost/SF | Total Cost |
|---|---|---|---|
| C1020 | Interior Doors | 5.95 | 923,846 |
| | ***Openings*** | ***$10.97*** | ***$1,701,496*** |
| **09** | **Finishings** | | |
| B2010 | Exterior Walls | 0.54 | 84,400 |
| C1010 | Partitions | 9.77 | 1,515,165 |
| C2020 | Stair Finishes | 0.03 | 4,224 |
| C3010 | Wall Finishes | 6.28 | 974,703 |
| C3020 | Floor Finishes | 7.76 | 1,203,718 |
| C3030 | Ceiling Finishes | 6.33 | 981,652 |
| | ***Finishings*** | ***$30.70*** | ***$4,763,862*** |
| **10** | **Specialties** | | |
| C1030 | Fittings | 14.13 | 2,192,015 |
| | ***Specialties*** | ***$14.13*** | ***$2,192,015*** |
| **11** | **Equipment** | | |
| E1010 | Commercial Equipment | 0.12 | 18,500 |
| E1020 | Institutional Equipment | | |
| E1030 | Vehicular Equipment | 0.03 | 5,000 |
| | ***Equipment*** | ***$0.15*** | ***$23,500*** |
| **12** | **Furnishings** | | |
| E2010 | Fixed Furnishings | 5.76 | 893,864 |
| E2020 | Movable Furnishings | | |
| | ***Furnishings*** | ***$5.76*** | ***$893,864*** |
| **13** | **Special Construction** | | |
| F1030 | Special Construction Systems | 2.60 | 403,835 |
| | ***Special Construction*** | ***$2.60*** | ***$403,835*** |
| **14** | **Conveying Equipment** | | |
| D1010 | Elevators & Lifts | 3.61 | 560,000 |
| | ***Conveying Equipment*** | ***$3.61*** | ***$560,000*** |
| **21** | **Fire Suppression** | | |
| D4010 | Sprinklers | 3.90 | 605,097 |
| | ***Fire Suppression*** | ***$3.90*** | ***$605,097*** |
| **22** | **Plumbing** | | |
| D2090 | Other Plumbing Systems | 22.27 | 3,454,922 |
| | ***Plumbing*** | ***$22.27*** | ***$3,454,922*** |
| **23** | **Heating, Ventilating, and Air Conditioning** | | |
| D3090 | Other HVAC Systems & Equipment | 57.12 | 8,862,626 |
| | ***Heating, Ventilating, and Air Conditioning*** | ***$57.12*** | ***$8,862,626*** |

# Medstar Southern Maryland Hospital - Addition / Renovation

## Preliminary Design Cost Estimate - Option B

Divisions/Elements Summary

Gross Floor Area: 155,153 SF
Rates Current At August 2013

| Description | | Cost/SF | Total Cost |
|---|---|---|---|
| **25 Integrated Automation** | | | |
| D3060 Controls & Instrumentations | | | |
| | ***Integrated Automation*** | | |
| **26 Electrical** | | | |
| D5090 Other Electrical Systems | | 34.85 | 5,407,704 |
| | ***Electrical*** | ***$34.85*** | ***$5,407,704*** |
| **27 Communications** | | | |
| D5030 Communications & Security | | 12.59 | 1,952,782 |
| | ***Communications*** | ***$12.59*** | ***$1,952,782*** |
| **28 Electronic Safety and Security** | | | |
| D5030 Communications & Security | | 10.71 | 1,662,232 |
| | ***Electronic Safety and Security*** | ***$10.71*** | ***$1,662,232*** |
| **31 Earthwork** | | | |
| A1030 Slab on Grade | | 0.32 | 49,189 |
| A2020 Basement Walls | | | |
| G1030 Site Earthwork | | 2.89 | 448,815 |
| G2050 Landscaping | | 0.33 | 51,905 |
| | ***Earthwork*** | ***$3.54*** | ***$549,909*** |
| **32 Exterior Improvements** | | | |
| G2020 Parking Lots | | 2.19 | 339,529 |
| G2030 Pedestrian Paving | | 0.56 | 86,445 |
| G2040 Site Development | | 2.34 | 363,492 |
| G2050 Landscaping | | 1.00 | 154,932 |
| | ***Exterior Improvements*** | ***$6.09*** | ***$944,398*** |
| **33 Utilities** | | | |
| G1020 Site Demolition and Relocations | | 2.47 | 383,164 |
| | ***Utilities*** | ***$2.47*** | ***$383,164*** |
| | **ESTIMATED NET COST** | **$278.88** | **$43,269,579** |
| **MARGINS & ADJUSTMENTS** | | | |
| Phasing / Temporary Works | 5.0 % | | $2,163,479 |
| General Conditions | 9.0 % | | $4,088,975 |
| Bonds and Insurances | 3.0 % | | $1,485,661 |
| Overhead and Profit | 4.5 % | | $2,295,346 |
| Design / Estimating Contingency | 15.0 % | | $7,995,456 |
| Escalation | 15.0 % | | $9,201,504 |
| | **ESTIMATED TOTAL COST** | **$454.39** | **$70,500,000** |

# Medstar Southern Maryland Hospital - Addition / Renovation

## Preliminary Design Cost Estimate - Option B

Divisions/Elements/Item

Gross Floor Area: 155,153 SF
Rates Current At August 2013

| Description | | Unit | Qty | Rate | Total Cost |
|---|---|---|---|---|---|
| **02** | **Existing Conditions** | | | | |
| **F2010** | **Building Elements Demolition** | | | | |
| 29 | Demolish and remove existing single-level building | SF | 7,184 | 10.00 | 71,840 |
| 31 | Dismantle and remove existing exterior wall construction | SF | 7,455 | 2.50 | 18,638 |
| 32 | Dismantle and remove existing basement retaining wall | SF | 5,620 | 2.50 | 14,050 |
| 30 | Allowance for full interior demolition to renovated areas | SF | 48,620 | 7.50 | 364,650 |
| | ***Building Elements Demolition*** | | | ***$3.02/SF*** | ***$469,178*** |
| **F2020** | **Hazardous Components Abatement** | | | | |
| 33 | Allowance for hazardous materials abatement | SF | 55,804 | 5.00 | 279,020 |
| | ***Hazardous Components Abatement*** | | | ***$1.80/SF*** | ***$279,020*** |
| **G1010** | **Site Clearing** | | | | |
| 171 | Allowance for site clearing | Item | | | 25,000 |
| | ***Site Clearing*** | | | ***$0.16/SF*** | ***$25,000*** |
| **G1020** | **Site Demolition and Relocations** | | | | |
| 144 | Demolish and remove existing retaining walls | LF | 121 | 75.00 | 9,075 |
| 147 | Demolish and remove existing curb | LF | 4,160 | 5.00 | 20,800 |
| 146 | Break-out and remove existing parking / access pavement | SF | 70,776 | 1.25 | 88,470 |
| 145 | Break-out and remove existing walkway | SF | 11,924 | 1.25 | 14,905 |
| 148 | Break-out and remove existing concrete pads | SF | 4,399 | 1.25 | 5,499 |
| 150 | Break-out and remove existing concrete steps | SF | 230 | 3.00 | 690 |
| 151 | Break-out and remove existing concrete helipad | SF | 3,050 | 3.75 | 11,438 |
| 149 | Break-out and remove existing loading dock | SF | 561 | 2.00 | 1,122 |
| 140 | Remove and dispose existing sign posts | EA | 80 | 50.00 | 4,000 |
| 142 | Remove and dispose existing flag pole | EA | 1 | 150.00 | 150 |
| 143 | Remove and dispose existing railing | LF | 102 | 15.00 | 1,530 |
| 152 | Remove and dispose of existing helipad safety netting | LF | 128 | 10.00 | 1,280 |
| 139 | Relocate existing dumpster | EA | 2 | 500.00 | 1,000 |
| 192 | Relocate existing site bollard; generator enclosure | EA | 12 | 500.00 | 6,000 |
| 185 | Relocate existing site signage | Item | | | 5,000 |
| 186 | Relocate existing building mounted wind vane | Item | | | 500 |
| 153 | Scarify existing parking pavement | SF | 26,910 | 0.50 | 13,455 |
| 168 | Allowance for miscellaneous site demolition not identified | Item | | | 25,000 |
| | ***Site Demolition and Relocations*** | | | ***$1.35/SF*** | ***$209,914*** |
| **G1040** | **Hazardous Waste Remediation** | | | | |
| 170 | Allowance for removal and treatment of contaminated soil | Item | | | Excl. |
| | ***Hazardous Waste Remediation*** | | | | |
| | ***Existing Conditions*** | | | ***$6.34/SF*** | ***$983,112*** |

# Medstar Southern Maryland Hospital - Addition / Renovation

## Preliminary Design Cost Estimate - Option B

Divisions/Elements/Item

Gross Floor Area: 155,153 SF
Rates Current At August 2013

| Description | | Unit | Qty | Rate | Total Cost |
|---|---|---|---|---|---|
| **03** | **Concrete** | | | | |
| **A1010** | **Standard Foundations** | | | | |
| 1 | Reinforced concrete strip footing; allow 72" x 12" (retaining wall) | LF | 301 | 100.00 | 30,100 |
| 2 | Reinforced concrete grade beam; allow 36" x 12" (perimeter) | LF | 624 | 50.00 | 31,200 |
| 4 | Reinforced concrete spread footing; allow 72" x 72" x 30" | EA | 93 | 1,700.00 | 158,100 |
| | ***Standard Foundations*** | | | ***$1.41/SF*** | ***$219,400*** |
| **A1030** | **Slab on Grade** | | | | |
| 215 | Reinforced concrete slab on grade; allow 6" thick | SF | 13,974 | 8.00 | 111,792 |
| 7 | Reinforced concrete slab on grade; allow 7" thick | SF | 27,863 | 8.50 | 236,836 |
| | ***Slab on Grade*** | | | ***$2.25/SF*** | ***$348,628*** |
| **A2020** | **Basement Walls** | | | | |
| 18 | Reinforced concrete retaining wall; allow 18" thick | SF | 6,020 | 40.00 | 240,800 |
| 17 | Reinforced concrete foundation wall; allow 10" thick | SF | 2,496 | 30.00 | 74,880 |
| 57 | Allowance for elevator pit | EA | 4 | 10,000.00 | 40,000 |
| | ***Basement Walls*** | | | ***$2.29/SF*** | ***$355,680*** |
| **B1010** | **Floor Construction** | | | | |
| 10 | Reinforced concrete column; allow 24" x 24" | LF | 1,060 | 150.00 | 159,000 |
| 11 | Reinforced concrete column; allow 30" x 30" | LF | 1,200 | 200.00 | 240,000 |
| 217 | Reinforced concrete suspended floor slab; allow 8" thick | SF | 13,974 | 25.00 | 349,350 |
| 8 | Reinforced concrete suspended floor slab; allow 10" thick | SF | 50,722 | 28.00 | 1,420,216 |
| 157 | Reinforced concrete beams | SF | 64,696 | 2.00 | 129,392 |
| | ***Floor Construction*** | | | ***$14.81/SF*** | ***$2,297,958*** |
| **B1020** | **Roof Construction** | | | | |
| 216 | Reinforced concrete column; allow 24" x 24" | LF | 795 | 150.00 | 119,250 |
| 12 | Reinforced concrete column; allow 30" x 30" | LF | 600 | 200.00 | 120,000 |
| 218 | Reinforced concrete suspended roof slab; allow 8" thick | SF | 13,974 | 25.00 | 349,350 |
| 9 | Reinforced concrete suspended roof slab; allow 10" thick | SF | 27,863 | 28.00 | 780,164 |
| 158 | Reinforced concrete beams | SF | 41,837 | 2.00 | 83,674 |
| | ***Roof Construction*** | | | ***$9.36/SF*** | ***$1,452,438*** |
| **B2010** | **Exterior Walls** | | | | |
| 212 | Reinforced concrete loading dock wall; allow 10" thick | SF | 360 | 30.00 | 10,800 |
| | ***Exterior Walls*** | | | ***$0.07/SF*** | ***$10,800*** |
| | ***Concrete*** | | | ***$30.20/SF*** | ***$4,684,904*** |
| **04** | **Masonry** | | | | |
| **B2010** | **Exterior Walls** | | | | |
| 20 | Face brick veneer | SF | 42,400 | 30.00 | 1,272,000 |

# Medstar Southern Maryland Hospital - Addition / Renovation
## Preliminary Design Cost Estimate - Option B

Divisions/Elements/Item

Gross Floor Area: 155,153 SF
Rates Current At August 2013

| Description | | Unit | Qty | Rate | Total Cost |
|---|---|---|---|---|---|
| 19 | Face brick veneer to exposed retaining wall | SF | 3,620 | 30.00 | 108,600 |
| | ***Exterior Walls*** | | | ***$8.90/SF*** | ***$1,380,600*** |
| | ***Masonry*** | | | ***$8.90/SF*** | ***$1,380,600*** |
| **05** | **Metals** | | | | |
| **C1030** | **Fittings** | | | | |
| 101 | Allowance for loading dock ramp, including guardrail | SF | 150 | 150.00 | 22,500 |
| 136 | Allowance for miscellaneous metals / equipment supports | SF | 150,214 | 0.50 | 75,107 |
| | ***Fittings*** | | | ***$0.63/SF*** | ***$97,607*** |
| **C2010** | **Stair Construction** | | | | |
| 56 | Metal pan stair with concrete filled treads and landings, including guardrails | FT/R | 80 | 1,200.00 | 96,000 |
| 102 | Metal grate stair to loading dock; approx. 3'-0" rise | Item | | | 2,500 |
| | ***Stair Construction*** | | | ***$0.63/SF*** | ***$98,500*** |
| | ***Metals*** | | | ***$1.26/SF*** | ***$196,107*** |
| **06** | **Wood, Plastics, and Composites** | | | | |
| **C1030** | **Fittings** | | | | |
| 40 | Allowance for rough carpentry | SF | 150,214 | 0.50 | 75,107 |
| 41 | Allowance for wood blocking | SF | 150,214 | 1.00 | 150,214 |
| | ***Fittings*** | | | ***$1.45/SF*** | ***$225,321*** |
| | ***Wood, Plastics, and Composites*** | | | ***$1.45/SF*** | ***$225,321*** |
| **07** | **Thermal and Moisture Protection** | | | | |
| **A1030** | **Slab on Grade** | | | | |
| 37 | Vapor barrier | SF | 41,837 | 0.50 | 20,919 |
| 38 | Rigid insulation; allow 2" thick | SF | 41,837 | 2.00 | 83,674 |
| 14 | Expansion joint to existing slab | LF | 768 | 75.00 | 57,600 |
| | ***Slab on Grade*** | | | ***$1.05/SF*** | ***$162,193*** |
| **A2020** | **Basement Walls** | | | | |
| 35 | Waterproofing membrane to sub-grade walls | SF | 8,516 | 5.00 | 42,580 |
| 36 | Rigid insulation to sub-grade walls; allow 2" thick | SF | 8,516 | 2.00 | 17,032 |
| 34 | Drainage mat / protection board to retaining wall | SF | 6,020 | 5.00 | 30,100 |
| | ***Basement Walls*** | | | ***$0.58/SF*** | ***$89,712*** |
| **B1010** | **Floor Construction** | | | | |
| 27 | Fire-proofing - Excluded (assume not required) | SF | 64,696 | | Excl. |
| | ***Floor Construction*** | | | | |
| **B1020** | **Roof Construction** | | | | |
| 15 | Expansion joint to existing suspended roof slab | LF | 494 | 75.00 | 37,050 |

# Medstar Southern Maryland Hospital - Addition / Renovation
## Preliminary Design Cost Estimate - Option B

Divisions/Elements/Item

Gross Floor Area: 155,153 SF
Rates Current At August 2013

| Description | | Unit | Qty | Rate | Total Cost |
|---|---|---|---|---|---|
| 28 | Fire-proofing - Excluded (assume not required) | SF | 41,837 | | Excl. |
| | ***Roof Construction*** | | | ***$0.24/SF*** | ***$37,050*** |
| **B2010** | **Exterior Walls** | | | | |
| 24 | Exterior wall backup, including plywood sheathing, rigid insulation, and vapor barrier | SF | 42,400 | 12.00 | 508,800 |
| 13 | Expansion joint to existing facade | LF | 70 | 75.00 | 5,250 |
| | ***Exterior Walls*** | | | ***$3.31/SF*** | ***$514,050*** |
| **B3010** | **Roof Coverings** | | | | |
| 26 | Single-ply roofing membrane to concrete roof slab | SF | 41,837 | 8.00 | 334,696 |
| | ***Roof Coverings*** | | | ***$2.16/SF*** | ***$334,696*** |
| **C1030** | **Fittings** | | | | |
| 42 | Allowance for miscellaneous fire-stopping | SF | 150,214 | 1.00 | 150,214 |
| 43 | Allowance for miscellaneous caulking and sealing | SF | 150,214 | 1.00 | 150,214 |
| | ***Fittings*** | | | ***$1.94/SF*** | ***$300,428*** |
| | ***Thermal and Moisture Protection*** | | | ***$9.27/SF*** | ***$1,438,129*** |
| **08** | **Openings** | | | | |
| **B2010** | **Exterior Walls** | | | | |
| 99 | Glazed storefront entry facade | SF | 1,215 | 100.00 | 121,500 |
| | ***Exterior Walls*** | | | ***$0.78/SF*** | ***$121,500*** |
| **B2020** | **Exterior Windows** | | | | |
| 21 | Exterior window unit | SF | 3,522 | 100.00 | 352,200 |
| | ***Exterior Windows*** | | | ***$2.27/SF*** | ***$352,200*** |
| **B2030** | **Exterior Doors** | | | | |
| 70 | Double leaf glass entry door, including frame, finish and hardware | Pr | 3 | 6,000.00 | 18,000 |
| 63 | Double leaf door, including frame, finish and hardware | Pr | 4 | 3,200.00 | 12,800 |
| 65 | Single leaf door, including frame, finish and hardware | EA | 7 | 1,800.00 | 12,600 |
| 64 | Overhead coiling roller door, including frame, finish and hardware | EA | 2 | 7,500.00 | 15,000 |
| | ***Exterior Doors*** | | | ***$0.38/SF*** | ***$58,400*** |
| **C1010** | **Partitions** | | | | |
| 62 | Glazed vesitbule partition | SF | 420 | 50.00 | 21,000 |
| 175 | Interior window unit / viewing panel | SF | 4,491 | 50.00 | 224,550 |
| | ***Partitions*** | | | ***$1.58/SF*** | ***$245,550*** |
| **C1020** | **Interior Doors** | | | | |
| 71 | Double leaf glass entry door, including frame, finish and hardware | Pr | 1 | 5,500.00 | 5,500 |

# Medstar Southern Maryland Hospital - Addition / Renovation
## Preliminary Design Cost Estimate - Option B

Divisions/Elements/Item

Gross Floor Area: 155,153 SF
Rates Current At August 2013

| Description | | Unit | Qty | Rate | Total Cost |
|---|---|---|---|---|---|
| 66 | Double leaf door, including frame, finish and hardware | Pr | 24 | 3,200.00 | 76,800 |
| 67 | Single leaf door, including frame, finish and hardware | EA | 323 | 1,800.00 | 581,400 |
| 68 | Single leaf fire-rated door, including frame, finish and hardware | EA | 13 | 2,500.00 | 32,500 |
| 72 | Re-paint existing double leaf door and frame | Pr | 3 | 150.00 | 450 |
| 69 | Re-paint existing single leaf door and frame | EA | 25 | 75.00 | 1,875 |
| 214 | Allowance for hospital grade doors and hardware | SF | 150,214 | 1.50 | 225,321 |
| | ***Interior Doors*** | | | ***$5.95/SF*** | ***$923,846*** |
| | ***Openings*** | | | ***$10.97/SF*** | ***$1,701,496*** |
| **09** | **Finishings** | | | | |
| **B2010** | **Exterior Walls** | | | | |
| 22 | Gypboard wall lining to metal stud framing | SF | 42,400 | 1.75 | 74,200 |
| 23 | Gypboard wall lining on furring channel; retaining wall | SF | 2,400 | 4.25 | 10,200 |
| | ***Exterior Walls*** | | | ***$0.54/SF*** | ***$84,400*** |
| **C1010** | **Partitions** | | | | |
| 58 | Gypboard partition | SF | 159,255 | 8.00 | 1,274,040 |
| 59 | Gypboard partition; fire-rated | SF | 20,385 | 10.00 | 203,850 |
| 60 | Allowance to repair existing exterior wall as new partition | SF | 7,455 | 5.00 | 37,275 |
| | ***Partitions*** | | | ***$9.77/SF*** | ***$1,515,165*** |
| **C2020** | **Stair Finishes** | | | | |
| 51 | Concrete floor sealer to treads and landings | SF | 2,112 | 2.00 | 4,224 |
| | ***Stair Finishes*** | | | ***$0.03/SF*** | ***$4,224*** |
| **C3010** | **Wall Finishes** | | | | |
| 133 | Wall tile; public restroom | SF | 6,930 | 18.00 | 124,740 |
| 134 | Protective wall lining; corridors | SF | 31,924 | 7.50 | 239,430 |
| 176 | Lead-lining to medical procedure room | SF | 7,080 | 25.00 | 177,000 |
| 61 | Paint finish to gypboard; partition lining | SF | 374,190 | 1.00 | 374,190 |
| 25 | Paint finish to gypboard; exterior wall lining | SF | 42,400 | 1.00 | 42,400 |
| 91 | Re-paint existing gypboard partition lining | SF | 11,295 | 1.50 | 16,943 |
| | ***Wall Finishes*** | | | ***$6.28/SF*** | ***$974,703*** |
| **C3020** | **Floor Finishes** | | | | |
| 44 | Sheet vinyl flooring, including base | SF | 126,573 | 8.00 | 1,012,584 |
| 49 | Floor tile, including base (public / staff restrooms) | SF | 3,667 | 16.00 | 58,672 |
| 47 | Feature floor tile, including base (ground floor lobby) | SF | 3,431 | 20.00 | 68,620 |
| 48 | Feature floor tile, including base (chapel / retail) | SF | 2,790 | 20.00 | 55,800 |
| 45 | Concrete floor sealer, including base | SF | 6,702 | 1.20 | 8,042 |

# Medstar Southern Maryland Hospital - Addition / Renovation
## Preliminary Design Cost Estimate - Option B

Divisions/Elements/Item

Gross Floor Area: 155,153 SF
Rates Current At August 2013

| Description | | Unit | Qty | Rate | Total Cost |
|---|---|---|---|---|---|
| 46 | Exposed concrete - no finish required | SF | 4,939 | | Excl. |
| | ***Floor Finishes*** | | | ***$7.76/SF*** | ***$1,203,718*** |
| **C3030** | **Ceiling Finishes** | | | | |
| 52 | ACT Ceiling system | SF | 123,058 | 5.50 | 676,819 |
| 53 | Gypboard ceiling; allow 10% of ceiling area | SF | 15,516 | 12.00 | 186,192 |
| 177 | Lead-lining to medical procedure room | SF | 2,752 | 30.00 | 82,560 |
| 54 | Paint finish to gypboard | SF | 15,516 | 1.20 | 18,619 |
| 55 | Paint finish to underside of exposed structure | SF | 11,641 | 1.50 | 17,462 |
| | ***Ceiling Finishes*** | | | ***$6.33/SF*** | ***$981,652*** |
| | ***Finishings*** | | | ***$30.70/SF*** | ***$4,763,862*** |
| **10** | **Specialties** | | | | |
| **C1030** | **Fittings** | | | | |
| 88 | Crash / bumper rail; corridors | LF | 7,981 | 40.00 | 319,240 |
| 89 | Corner guard; corridors | EA | 195 | 200.00 | 39,000 |
| 84 | Allowance for staff locker | EA | 60 | 300.00 | 18,000 |
| 87 | Allowance for fire extinguishers | EA | 34 | 350.00 | 11,900 |
| 108 | Allowance for janitor accessories | EA | 5 | 1,500.00 | 7,500 |
| 85 | Allowance for interior code signage | SF | 150,214 | 0.75 | 112,661 |
| 95 | Allowance for interior directional signage | SF | 150,214 | 1.00 | 150,214 |
| 86 | Allowance for exterior building signage | Item | | | 20,000 |
| 109 | Medical; allowance for miscellaneous fittings and accessories (procedural room) | EA | 17 | 7,500.00 | 127,500 |
| 110 | Medical; allowance for miscellaneous fittings and accessories (decon / ante / anest.) | EA | 4 | 7,500.00 | 30,000 |
| 111 | Medical; allowance for miscellaneous fittings and accessories (exam / prep room) | EA | 42 | 5,000.00 | 210,000 |
| 112 | Medical; allowance for miscellaneous fittings and accessories (patient room) | EA | 101 | 5,000.00 | 505,000 |
| 114 | Medical Support; allowance for miscellaneous fittings and accessories (support / admin / office) | EA | 20 | 2,500.00 | 50,000 |
| 115 | Medical Support; allowance for miscellaneous fittings and accessories (soiled / linen / clean) | EA | 11 | 5,000.00 | 55,000 |
| 116 | Medical Support; allowance for miscellaneous fittings and accessories (nurse station) | EA | 26 | 1,000.00 | 26,000 |
| 117 | Amenities / Staff; allowance for miscellaneous fittings and accessories (restroom) | EA | 116 | 2,500.00 | 290,000 |
| 118 | Amenities / Staff; allowance for miscellaneous fittings and accessories (staff room) | EA | 5 | 2,500.00 | 12,500 |
| 119 | Amenities / Staff; allowance for miscellaneous fittings and accessories (locker room) | EA | 2 | 5,000.00 | 10,000 |
| 120 | Amenities / Staff; allowance for miscellaneous fittings and accessories (nourishment) | EA | 4 | 5,000.00 | 20,000 |

# Medstar Southern Maryland Hospital - Addition / Renovation

## Preliminary Design Cost Estimate - Option B

Divisions/Elements/Item

Gross Floor Area: 155,153 SF
Rates Current At August 2013

| Description | | Unit | Qty | Rate | Total Cost |
|---|---|---|---|---|---|
| 122 | Amenities / Staff; allowance for miscellaneous fittings and accessories (lounge / comfort) | EA | 1 | 5,000.00 | 5,000 |
| 123 | Amenities / Staff; allowance for miscellaneous fittings and accessories (janitor / housekeeping) | EA | 5 | 2,500.00 | 12,500 |
| 124 | Storage / Plant; allowance for miscellaneous fittings and accessories (storage / med supply) | EA | 22 | 2,500.00 | 55,000 |
| 125 | Storage / Plant; allowance for miscellaneous fittings and accessories (plant room) | EA | 5 | 500.00 | 2,500 |
| 126 | Storage / Plant; allowance for miscellaneous fittings and accessories (dirty / clean / cart wash) | EA | 2 | 5,000.00 | 10,000 |
| 127 | Storage / Plant; allowance for miscellaneous fittings and accessories (shipping / receiving) | EA | 1 | 2,500.00 | 2,500 |
| 128 | Other; allowance for miscellaneous fittings and accessories (vestibule / waiting area) | EA | 9 | 10,000.00 | 90,000 |
| 129 | Other; allowance for miscellaneous fittings and accessories (shell) | EA | 1 | | Excl. |
| | ***Fittings*** | | | ***$14.13/SF*** | ***$2,192,015*** |
| | ***Specialties*** | | | ***$14.13/SF*** | ***$2,192,015*** |
| **11** | **Equipment** | | | | |
| **E1010** | **Commercial Equipment** | | | | |
| 82 | Appliances to staff room; including refrigerator, dishwasher, and microwave | EA | 5 | 2,500.00 | 12,500 |
| 83 | Appliances to nourishment area; including refrigerator, and microwave | EA | 4 | 1,500.00 | 6,000 |
| 94 | Food service equipment - Excluded (furnished and installed by Owner) | Item | | | Excl. |
| | ***Commercial Equipment*** | | | ***$0.12/SF*** | ***$18,500*** |
| **E1020** | **Institutional Equipment** | | | | |
| 93 | Medical equipment - Excluded (furnished an installed by Owner) | Item | | | Excl. |
| | ***Institutional Equipment*** | | | | |
| **E1030** | **Vehicular Equipment** | | | | |
| 100 | Dock bumper | EA | 20 | 250.00 | 5,000 |
| | ***Vehicular Equipment*** | | | ***$0.03/SF*** | ***$5,000*** |
| | ***Equipment*** | | | ***$0.15/SF*** | ***$23,500*** |
| **12** | **Furnishings** | | | | |
| **E2010** | **Fixed Furnishings** | | | | |
| 73 | Casework; base cabinet unit (nourishment) | LF | 48 | 450.00 | 21,600 |
| 74 | Casework; base cabinet unit (staff room) | LF | 123 | 350.00 | 43,050 |
| 106 | Casework; base cabinet unit to exam / prep room (allow 6'-0" per room) | LF | 252 | 450.00 | 113,400 |

# Medstar Southern Maryland Hospital - Addition / Renovation
## Preliminary Design Cost Estimate - Option B

Divisions/Elements/Item

Gross Floor Area: 155,153 SF
Rates Current At August 2013

| Description | | Unit | Qty | Rate | Total Cost |
|---|---|---|---|---|---|
| 75 | Casework; nurse station desk | LF | 912 | 500.00 | 456,000 |
| 76 | Casework; overhead cabinet unit (nourishment) | LF | 48 | 250.00 | 12,000 |
| 77 | Casework; overhead cabinet unit (kitchen) | LF | 123 | 200.00 | 24,600 |
| 107 | Casework; overhead cabinet unit to exam / prep room (allow 6'-0" per room) | LF | 252 | 250.00 | 63,000 |
| 105 | Commercial fit-out to retail spaces - Excluded (by Owner) | Item | | | Excl. |
| 98 | Allowance for main reception desk | Item | | | 10,000 |
| 137 | Allowance for miscellaneous casework not identified | SF | 150,214 | 1.00 | 150,214 |
| | ***Fixed Furnishings*** | | | ***$5.76/SF*** | ***$893,864*** |
| **E2020** | **Movable Furnishings** | | | | |
| 97 | FF&E - Excluded (by Owner) | Item | | | Excl. |
| 103 | Loose furniture and equipment to waiting / lobby areas - Excluded (by Owner) | Item | | | Excl. |
| 104 | Loose furniture and equipment to patient / staff lounge - Excluded (by Owner) | Item | | | Excl. |
| 138 | Loose medical equipment, casework, and furniture - Excluded (by Owner) | Item | | | Excl. |
| | ***Movable Furnishings*** | | | | |
| | ***Furnishings*** | | | ***$5.76/SF*** | ***$893,864*** |
| **13** | **Special Construction** | | | | |
| **F1030** | **Special Construction Systems** | | | | |
| 78 | Lobby; allowance for complete fit-out, including partitions, doors, casework, fittings and accessories | SF | 3,431 | 10.00 | 34,310 |
| 79 | Admin / Security Offices; allowance for complete fit-out, including partitions, doors, casework, fittings and accessories | SF | 5,256 | 25.00 | 131,400 |
| 80 | Chapel / Retail; allowance for complete fit-out, including partitions, doors, casework, fittings and accessories | SF | 2,790 | 50.00 | 139,500 |
| 81 | Family Waiting / Consultation; allowance for complete fit-out, including partitions, doors, casework, fittings and accessories | SF | 3,945 | 25.00 | 98,625 |
| | ***Special Construction Systems*** | | | ***$2.60/SF*** | ***$403,835*** |
| | ***Special Construction*** | | | ***$2.60/SF*** | ***$403,835*** |
| **14** | **Conveying Equipment** | | | | |
| **D1010** | **Elevators & Lifts** | | | | |
| 211 | (3) Stop passenger elevator; emergency department | EA | 4 | 140,000.00 | 560,000 |
| | ***Elevators & Lifts*** | | | ***$3.61/SF*** | ***$560,000*** |
| | ***Conveying Equipment*** | | | ***$3.61/SF*** | ***$560,000*** |
| **21** | **Fire Suppression** | | | | |
| **D4010** | **Sprinklers** | | | | |
| 198 | Additional areas | SF | 101,594 | 3.90 | 396,217 |

# Medstar Southern Maryland Hospital - Addition / Renovation
## Preliminary Design Cost Estimate - Option B

Divisions/Elements/Item

Gross Floor Area: 155,153 SF
Rates Current At August 2013

| Description | Unit | Qty | Rate | Total Cost |
|---|---|---|---|---|
| 199 Renovated areas | SF | 48,620 | 3.90 | 189,618 |
| 219 Shell space | SF | 4,939 | 3.90 | 19,262 |
| ***Sprinklers*** | | | ***$3.90/SF*** | ***$605,097*** |
| ***Fire Suppression*** | | | ***$3.90/SF*** | ***$605,097*** |
| **22 Plumbing** | | | | |
| **D2090 Other Plumbing Systems** | | | | |
| 196 Additional areas | SF | 101,594 | 23.00 | 2,336,662 |
| 197 Renovated areas | SF | 48,620 | 23.00 | 1,118,260 |
| 220 Shell space | SF | 4,939 | | Excl. |
| ***Other Plumbing Systems*** | | | ***$22.27/SF*** | ***$3,454,922*** |
| ***Plumbing*** | | | ***$22.27/SF*** | ***$3,454,922*** |
| **23 Heating, Ventilating, and Air Conditioning** | | | | |
| **D3090 Other HVAC Systems & Equipment** | | | | |
| 200 Additional areas | SF | 101,594 | 59.00 | 5,994,046 |
| 201 Renovated areas | SF | 48,620 | 59.00 | 2,868,580 |
| 221 Shell space | SF | 4,939 | | Excl. |
| ***Other HVAC Systems & Equipment*** | | | ***$57.12/SF*** | ***$8,862,626*** |
| ***Heating, Ventilating, and Air Conditioning*** | | | ***$57.12/SF*** | ***$8,862,626*** |
| **25 Integrated Automation** | | | | |
| **D3060 Controls & Instrumentations** | | | | |
| 202 Additional areas | SF | 101,594 | | Incl. |
| 203 Renovated areas | SF | 48,620 | | Incl. |
| 222 Shell space | SF | 4,939 | | Excl. |
| ***Controls & Instrumentations*** | | | | |
| ***Integrated Automation*** | | | | |
| **26 Electrical** | | | | |
| **D5090 Other Electrical Systems** | | | | |
| 204 Additional areas | SF | 101,594 | 36.00 | 3,657,384 |
| 205 Renovated areas | SF | 48,620 | 36.00 | 1,750,320 |
| 223 Shell space | SF | 4,939 | | Excl. |
| ***Other Electrical Systems*** | | | ***$34.85/SF*** | ***$5,407,704*** |
| ***Electrical*** | | | ***$34.85/SF*** | ***$5,407,704*** |
| **27 Communications** | | | | |
| **D5030 Communications & Security** | | | | |
| 206 Additional areas | SF | 101,594 | 13.00 | 1,320,722 |

# Medstar Southern Maryland Hospital - Addition / Renovation
## Preliminary Design Cost Estimate - Option B

Divisions/Elements/Item

Gross Floor Area: 155,153 SF
Rates Current At August 2013

| Description | Unit | Qty | Rate | Total Cost |
|---|---|---|---|---|
| 207 Renovated areas | SF | 48,620 | 13.00 | 632,060 |
| 224 Shell space | SF | 4,939 | | Excl. |
| ***Communications & Security*** | | | ***$12.59/SF*** | ***$1,952,782*** |
| ***Communications*** | | | ***$12.59/SF*** | ***$1,952,782*** |
| **28 Electronic Safety and Security** | | | | |
| **D5030 Communications & Security** | | | | |
| 208 Additional areas | SF | 101,594 | 11.00 | 1,117,534 |
| 209 Renovated areas | SF | 48,620 | 11.00 | 534,820 |
| 225 Shell space | SF | 4,939 | 2.00 | 9,878 |
| ***Communications & Security*** | | | ***$10.71/SF*** | ***$1,662,232*** |
| ***Electronic Safety and Security*** | | | ***$10.71/SF*** | ***$1,662,232*** |
| **31 Earthwork** | | | | |
| **A1030 Slab on Grade** | | | | |
| 178 Imported granular fill as sub-base | CY | 1,291 | 30.00 | 38,730 |
| 179 Trim and compact subgrade | SF | 41,837 | 0.25 | 10,459 |
| ***Slab on Grade*** | | | ***$0.32/SF*** | ***$49,189*** |
| **A2020 Basement Walls** | | | | |
| 213 Deep foundation systems - Excluded | Item | | | Excl. |
| ***Basement Walls*** | | | | |
| **G1030 Site Earthwork** | | | | |
| 160 Imported fill to proposed levels | CY | 9,516 | 35.00 | 333,060 |
| 161 Mass excavation to proposed levels | CY | 1,530 | 6.00 | 9,180 |
| 162 Remove and dispose excavated spoil from site | CY | 1,530 | 15.00 | 22,950 |
| 39 Subsoil drain to retaining / foundation wall | LF | 925 | 18.00 | 16,650 |
| 163 Allowance for fine grading | SF | 107,901 | 0.25 | 26,975 |
| 172 Construction entrance | EA | 2 | 5,000.00 | 10,000 |
| 173 Dust control | Item | | | 10,000 |
| 174 Allowance for soil erosion and sediment controls | Item | | | 20,000 |
| ***Site Earthwork*** | | | ***$2.89/SF*** | ***$448,815*** |
| **G2050 Landscaping** | | | | |
| 166 Imported planting material | CY | 1,483 | 35.00 | 51,905 |
| ***Landscaping*** | | | ***$0.33/SF*** | ***$51,905*** |
| ***Earthwork*** | | | ***$3.54/SF*** | ***$549,909*** |
| **32 Exterior Improvements** | | | | |
| **G2020 Parking Lots** | | | | |
| 154 Bituminous concrete pavement, including sub-base | SY | 6,305 | 30.00 | 189,150 |

# Medstar Southern Maryland Hospital - Addition / Renovation
## Preliminary Design Cost Estimate - Option B

Divisions/Elements/Item

Gross Floor Area: 155,153 SF
Rates Current At August 2013

| Description | | Unit | Qty | Rate | Total Cost |
|---|---|---|---|---|---|
| 155 | Bituminous top and finish course to existing pavement | SY | 2,990 | 20.00 | 59,800 |
| 156 | Concrete curb and gutter | LF | 2,722 | 30.00 | 81,660 |
| 159 | Allowance for pavement markings | SF | 59,459 | 0.15 | 8,919 |
| | ***Parking Lots*** | | | ***$2.19/SF*** | ***$339,529*** |
| **G2030** | **Pedestrian Paving** | | | | |
| 182 | Reinforced concrete pavement; allow 6" thick | SF | 9,605 | 9.00 | 86,445 |
| | ***Pedestrian Paving*** | | | ***$0.56/SF*** | ***$86,445*** |
| **G2040** | **Site Development** | | | | |
| 165 | Reinforced concrete site retaining wall, including footing | SF | 2,960 | 50.00 | 148,000 |
| 164 | Reinforced concrete helipad | SF | 3,141 | 12.00 | 37,692 |
| 184 | Reinforced concrete equipment pad; transformers (2) | Item | | | 3,000 |
| 188 | Reinforced concrete equipment pad; propane / oxygen tanks (2) | Item | | | 3,000 |
| 189 | Reinforced concrete equipment pad; generator | Item | | | 1,050 |
| 190 | Chain link plant enclosure; propane / oxygen tanks | LF | 100 | 45.00 | 4,500 |
| 191 | Chain link plant enclosure; generator | LF | 100 | 45.00 | 4,500 |
| 187 | Linemarking to helipad | Item | | | 1,500 |
| 180 | Allowance for modular retaining wall to helipad | SF | 1,218 | 25.00 | 30,450 |
| 181 | Allowance for helipad safety net including structrual framing | SF | 870 | 40.00 | 34,800 |
| 193 | Allowance for new entry canopy | SF | 1,700 | 50.00 | 85,000 |
| 183 | Allowance for miscellaneous site furniture | Item | | | 10,000 |
| | ***Site Development*** | | | ***$2.34/SF*** | ***$363,492*** |
| **G2050** | **Landscaping** | | | | |
| 167 | Allowance for landscaping; seeding | SF | 9,605 | 0.35 | 3,362 |
| 194 | Allowance for landscaping; plantings | SF | 28,814 | 5.00 | 144,070 |
| 195 | Allowance for landscaping; trees | EA | 5 | 1,500.00 | 7,500 |
| | ***Landscaping*** | | | ***$1.00/SF*** | ***$154,932*** |
| | ***Exterior Improvements*** | | | ***$6.09/SF*** | ***$944,398*** |
| **33** | **Utilities** | | | | |
| **G1020** | **Site Demolition and Relocations** | | | | |
| 141 | Remove and dispose existing light post | EA | 16 | 500.00 | 8,000 |
| 130 | Relocate existing transformers | Item | | | 25,000 |
| 135 | Relocate existing generator | Item | | | 15,000 |
| 131 | Relocate existing propane and oxygen tanks | Item | | | 10,000 |
| 226 | Replacement of existing transformers, generator, oxygen / propane tanks, etc - Excluded (assumed not required) | Item | | | Excl. |
| 227 | Site pole lighting | EA | 16 | 5,000.00 | 80,000 |
| 228 | Allowance to re-work existing site storm drainage | SF | 95,164 | 1.00 | 95,164 |

# Medstar Southern Maryland Hospital - Addition / Renovation

## Preliminary Design Cost Estimate - Option B

Divisions/Elements/Item

Gross Floor Area: 155,153 SF
Rates Current At August 2013

| Description | Unit | Qty | Rate | Total Cost |
|---|---|---|---|---|
| 132 Allowance for site utilities diversions not identified | Item | | | 150,000 |
| ***Site Demolition and Relocations*** | | | ***$2.47/SF*** | ***$383,164*** |
| ***Utilities*** | | | ***$2.47/SF*** | ***$383,164*** |
| ***ESTIMATED NET COST*** | | | ***$278.88/SF*** | ***$43,269,579*** |

# 5.0 ESTIMATE DETAIL - Option C

# Medstar Southern Maryland Hospital - Addition / Renovation

## Preliminary Design Cost Estimate - Option C

Location Summary

GFA: Gross Floor Area
Rates Current At August 2013

| Location | | GFA SF | Cost/SF | Total Cost |
|---|---|---|---|---|
| **ALL ALL LOCATIONS** | | **184,347** | **270.15** | **49,800,969** |
| | **ESTIMATED NET COST** | **184,347** | **$270.15** | **$49,800,969** |
| **MARGINS & ADJUSTMENTS** | | | | |
| Phasing / Temporary Works | 5.0 % | | | $2,490,048 |
| General Conditions | 9.0 % | | | $4,706,192 |
| Bonds and Insurances | 3.0 % | | | $1,709,916 |
| Overhead and Profit | 4.5 % | | | $2,641,821 |
| Design / Estimating Contingency | 15.0 % | | | $9,202,342 |
| Escalation | 15.0 % | | | $10,598,712 |
| | **ESTIMATED TOTAL COST** | **184,347** | **$440.20** | **$81,150,000** |

# Medstar Southern Maryland Hospital - Addition / Renovation

## Preliminary Design Cost Estimate - Option C

Divisions/Elements Summary

Gross Floor Area: 184,347 SF
Rates Current At August 2013

| Description | | Cost/SF | Total Cost |
|---|---|---|---|
| **02 Existing Conditions** | | | |
| F2010 | Building Elements Demolition | 4.29 | 790,809 |
| F2020 | Hazardous Components Abatement | 2.57 | 473,070 |
| G1010 | Site Clearing | 0.14 | 25,000 |
| G1020 | Site Demolition and Relocations | 1.14 | 209,914 |
| G1040 | Hazardous Waste Remediation | | |
| | ***Existing Conditions*** | ***$8.13*** | ***$1,498,793*** |
| **03 Concrete** | | | |
| A1010 | Standard Foundations | 0.52 | 95,600 |
| A1030 | Slab on Grade | 1.82 | 335,584 |
| A2020 | Basement Walls | 1.79 | 329,880 |
| B1010 | Floor Construction | 7.33 | 1,351,638 |
| B1020 | Roof Construction | 11.70 | 2,157,186 |
| B2010 | Exterior Walls | 0.06 | 10,800 |
| | ***Concrete*** | ***$23.22*** | ***$4,280,688*** |
| **04 Masonry** | | | |
| B2010 | Exterior Walls | 11.56 | 2,131,200 |
| | ***Masonry*** | ***$11.56*** | ***$2,131,200*** |
| **05 Metals** | | | |
| C1030 | Fittings | 0.58 | 107,822 |
| C2010 | Stair Construction | 0.53 | 98,500 |
| | ***Metals*** | ***$1.12*** | ***$206,322*** |
| **06 Wood, Plastics, and Composites** | | | |
| C1030 | Fittings | 1.39 | 255,965 |
| | ***Wood, Plastics, and Composites*** | ***$1.39*** | ***$255,965*** |
| **07 Thermal and Moisture Protection** | | | |
| A1030 | Slab on Grade | 0.89 | 163,895 |
| A2020 | Basement Walls | 0.49 | 90,692 |
| B1010 | Floor Construction | | |
| B1020 | Roof Construction | 0.20 | 37,050 |
| B2010 | Exterior Walls | 4.43 | 816,540 |
| B3010 | Roof Coverings | 2.70 | 498,608 |
| C1030 | Fittings | 1.85 | 341,286 |
| | ***Thermal and Moisture Protection*** | ***$10.57*** | ***$1,948,071*** |
| **08 Openings** | | | |
| B2010 | Exterior Walls | 0.66 | 121,500 |
| B2020 | Exterior Windows | 3.27 | 602,400 |
| B2030 | Exterior Doors | 0.32 | 58,400 |
| C1010 | Partitions | 1.60 | 295,700 |

# Medstar Southern Maryland Hospital - Addition / Renovation

## Preliminary Design Cost Estimate - Option C

Divisions/Elements Summary

Gross Floor Area: 184,347 SF
Rates Current At August 2013

| Description | | Cost/SF | Total Cost |
|---|---|---|---|
| C1020 | Interior Doors | 6.59 | 1,214,590 |
| | ***Openings*** | ***$12.44*** | ***$2,292,590*** |
| **09 Finishings** | | | |
| B2010 | Exterior Walls | 0.70 | 128,185 |
| C1010 | Partitions | 10.02 | 1,847,494 |
| C2020 | Stair Finishes | 0.04 | 6,520 |
| C3010 | Wall Finishes | 6.30 | 1,160,784 |
| C3020 | Floor Finishes | 7.55 | 1,392,066 |
| C3030 | Ceiling Finishes | 6.06 | 1,116,488 |
| | ***Finishings*** | ***$30.66*** | ***$5,651,537*** |
| **10 Specialties** | | | |
| C1030 | Fittings | 14.20 | 2,617,985 |
| | ***Specialties*** | ***$14.20*** | ***$2,617,985*** |
| **11 Equipment** | | | |
| E1010 | Commercial Equipment | 0.10 | 19,000 |
| E1020 | Institutional Equipment | | |
| E1030 | Vehicular Equipment | 0.03 | 5,000 |
| | ***Equipment*** | ***$0.13*** | ***$24,000*** |
| **12 Furnishings** | | | |
| E2010 | Fixed Furnishings | 4.64 | 854,643 |
| E2020 | Movable Furnishings | | |
| | ***Furnishings*** | ***$4.64*** | ***$854,643*** |
| **13 Special Construction** | | | |
| F1030 | Special Construction Systems | 2.19 | 403,835 |
| | ***Special Construction*** | ***$2.19*** | ***$403,835*** |
| **14 Conveying Equipment** | | | |
| D1010 | Elevators & Lifts | 4.18 | 770,000 |
| | ***Conveying Equipment*** | ***$4.18*** | ***$770,000*** |
| **21 Fire Suppression** | | | |
| D4010 | Sprinklers | 3.90 | 718,954 |
| | ***Fire Suppression*** | ***$3.90*** | ***$718,954*** |
| **22 Plumbing** | | | |
| D2090 | Other Plumbing Systems | 21.29 | 3,924,789 |
| | ***Plumbing*** | ***$21.29*** | ***$3,924,789*** |
| **23 Heating, Ventilating, and Air Conditioning** | | | |
| D3090 | Other HVAC Systems & Equipment | 54.61 | 10,067,937 |
| | ***Heating, Ventilating, and Air Conditioning*** | ***$54.61*** | ***$10,067,937*** |

# Medstar Southern Maryland Hospital - Addition / Renovation

## Preliminary Design Cost Estimate - Option C

Divisions/Elements Summary

Gross Floor Area: 184,347 SF
Rates Current At August 2013

| Description | | Cost/SF | Total Cost |
|---|---|---|---|
| **25 Integrated Automation** | | | |
| D3060 Controls & Instrumentations | | | |
| | ***Integrated Automation*** | | |
| **26 Electrical** | | | |
| D5090 Other Electrical Systems | | 33.32 | 6,143,148 |
| | ***Electrical*** | ***$33.32*** | ***$6,143,148*** |
| **27 Communications** | | | |
| D5030 Communications & Security | | 12.03 | 2,218,359 |
| | ***Communications*** | ***$12.03*** | ***$2,218,359*** |
| **28 Electronic Safety and Security** | | | |
| D5030 Communications & Security | | 10.33 | 1,904,481 |
| | ***Electronic Safety and Security*** | ***$10.33*** | ***$1,904,481*** |
| **31 Earthwork** | | | |
| A1030 Slab on Grade | | 0.27 | 49,337 |
| A2020 Basement Walls | | | |
| G1030 Site Earthwork | | 2.44 | 449,445 |
| G2050 Landscaping | | 0.28 | 51,905 |
| | ***Earthwork*** | ***$2.99*** | ***$550,687*** |
| **32 Exterior Improvements** | | | |
| G2020 Parking Lots | | 1.84 | 339,529 |
| G2030 Pedestrian Paving | | 0.47 | 86,445 |
| G2040 Site Development | | 2.02 | 372,915 |
| G2050 Landscaping | | 0.84 | 154,932 |
| | ***Exterior Improvements*** | ***$5.17*** | ***$953,821*** |
| **33 Utilities** | | | |
| G1020 Site Demolition and Relocations | | 2.08 | 383,164 |
| | ***Utilities*** | ***$2.08*** | ***$383,164*** |
| | **ESTIMATED NET COST** | **$270.15** | **$49,800,969** |
| **MARGINS & ADJUSTMENTS** | | | |
| Phasing / Temporary Works | 5.0 % | | $2,490,048 |
| General Conditions | 9.0 % | | $4,706,192 |
| Bonds and Insurances | 3.0 % | | $1,709,916 |
| Overhead and Profit | 4.5 % | | $2,641,821 |
| Design / Estimating Contingency | 15.0 % | | $9,202,342 |
| Escalation | 15.0 % | | $10,598,712 |
| | **ESTIMATED TOTAL COST** | **$440.20** | **$81,150,000** |

# Medstar Southern Maryland Hospital - Addition / Renovation
## Preliminary Design Cost Estimate - Option C

Divisions/Elements/Item

Gross Floor Area: 184,347 SF
Rates Current At August 2013

| Description | | Unit | Qty | Rate | Total Cost |
|---|---|---|---|---|---|
| **02** | **Existing Conditions** | | | | |
| **F2010** | **Building Elements Demolition** | | | | |
| 29 | Demolish and remove existing single-level building | SF | 7,184 | 10.00 | 71,840 |
| 31 | Dismantle and remove existing exterior wall construction | SF | 7,590 | 2.50 | 18,975 |
| 32 | Dismantle and remove existing basement retaining wall | SF | 5,620 | 2.50 | 14,050 |
| 215 | Take-up and remove existing roof coverings | SF | 20,146 | 1.50 | 30,219 |
| 30 | Allowance for full interior demolition to renovated areas | SF | 87,430 | 7.50 | 655,725 |
| | ***Building Elements Demolition*** | | | ***$4.29/SF*** | ***$790,809*** |
| **F2020** | **Hazardous Components Abatement** | | | | |
| 33 | Allowance for hazardous materials abatement | SF | 94,614 | 5.00 | 473,070 |
| | ***Hazardous Components Abatement*** | | | ***$2.57/SF*** | ***$473,070*** |
| **G1010** | **Site Clearing** | | | | |
| 171 | Allowance for site clearing | Item | | | 25,000 |
| | ***Site Clearing*** | | | ***$0.14/SF*** | ***$25,000*** |
| **G1020** | **Site Demolition and Relocations** | | | | |
| 144 | Demolish and remove existing retaining walls | LF | 121 | 75.00 | 9,075 |
| 147 | Demolish and remove existing curb | LF | 4,160 | 5.00 | 20,800 |
| 146 | Break-out and remove existing parking / access pavement | SF | 70,776 | 1.25 | 88,470 |
| 145 | Break-out and remove existing walkway | SF | 11,924 | 1.25 | 14,905 |
| 148 | Break-out and remove existing concrete pads | SF | 4,399 | 1.25 | 5,499 |
| 150 | Break-out and remove existing concrete steps | SF | 230 | 3.00 | 690 |
| 151 | Break-out and remove existing concrete helipad | SF | 3,050 | 3.75 | 11,438 |
| 149 | Break-out and remove existing loading dock | SF | 561 | 2.00 | 1,122 |
| 140 | Remove and dispose existing sign posts | EA | 80 | 50.00 | 4,000 |
| 142 | Remove and dispose existing flag pole | EA | 1 | 150.00 | 150 |
| 143 | Remove and dispose existing railing | LF | 102 | 15.00 | 1,530 |
| 152 | Remove and dispose of existing helipad safety netting | LF | 128 | 10.00 | 1,280 |
| 139 | Relocate existing dumpster | EA | 2 | 500.00 | 1,000 |
| 192 | Relocate existing site bollard; generator enclosure | EA | 12 | 500.00 | 6,000 |
| 185 | Relocate existing site signage | Item | | | 5,000 |
| 186 | Relocate existing building mounted wind vane | Item | | | 500 |
| 153 | Scarify existing parking pavement | SF | 26,910 | 0.50 | 13,455 |
| 168 | Allowance for miscellaneous site demolition not identified | Item | | | 25,000 |
| | ***Site Demolition and Relocations*** | | | ***$1.14/SF*** | ***$209,914*** |
| **G1040** | **Hazardous Waste Remediation** | | | | |
| 170 | Allowance for removal and treatment of contaminated soil | Item | | | Excl. |
| | ***Hazardous Waste Remediation*** | | | | |
| | ***Existing Conditions*** | | | ***$8.13/SF*** | ***$1,498,793*** |

# Medstar Southern Maryland Hospital - Addition / Renovation
## Preliminary Design Cost Estimate - Option C

Divisions/Elements/Item

Gross Floor Area: 184,347 SF
Rates Current At August 2013

| Description | | Unit | Qty | Rate | Total Cost |
|---|---|---|---|---|---|
| **03** | **Concrete** | | | | |
| **A1010** | **Standard Foundations** | | | | |
| 1 | Reinforced concrete strip footing; allow 72" x 12" (retaining wall) | LF | 301 | 100.00 | 30,100 |
| 2 | Reinforced concrete grade beam; allow 36" x 12" (perimeter) | LF | 659 | 50.00 | 32,950 |
| 3 | Reinforced concrete spread footing; allow 36" x 36" x 18" | EA | 93 | 350.00 | 32,550 |
| | ***Standard Foundations*** | | | ***$0.52/SF*** | ***$95,600*** |
| **A1030** | **Slab on Grade** | | | | |
| 7 | Reinforced concrete slab on grade; allow 6" thick | SF | 41,948 | 8.00 | 335,584 |
| | ***Slab on Grade*** | | | ***$1.82/SF*** | ***$335,584*** |
| **A2020** | **Basement Walls** | | | | |
| 18 | Reinforced concrete retaining wall; allow 18" thick | SF | 6,020 | 40.00 | 240,800 |
| 17 | Reinforced concrete foundation wall; allow 10" thick | SF | 2,636 | 30.00 | 79,080 |
| 57 | Allowance for elevator pit | EA | 1 | 10,000.00 | 10,000 |
| | ***Basement Walls*** | | | ***$1.79/SF*** | ***$329,880*** |
| **B1010** | **Floor Construction** | | | | |
| 11 | Reinforced concrete column; allow 24" x 24" | LF | 1,060 | 150.00 | 159,000 |
| 218 | Reinforced concrete column; allow 30" x 30" | LF | 1,020 | 200.00 | 204,000 |
| 219 | Reinforced concrete suspended floor slab; allow 8" thick | SF | 13,974 | 25.00 | 349,350 |
| 8 | Reinforced concrete suspended floor slab; allow 10" thick | SF | 20,378 | 28.00 | 570,584 |
| 157 | Reinforced concrete beams | SF | 34,352 | 2.00 | 68,704 |
| | ***Floor Construction*** | | | ***$7.33/SF*** | ***$1,351,638*** |
| **B1020** | **Roof Construction** | | | | |
| 12 | Reinforced concrete column; allow 24" x 24" | LF | 1,395 | 150.00 | 209,250 |
| 220 | Reinforced concrete column; allow 20" x 30" | LF | 1,020 | 200.00 | 204,000 |
| 213 | Reinforced concrete suspended roof slab; allow 8" thick | SF | 41,948 | 25.00 | 1,048,700 |
| 9 | Reinforced concrete suspended roof slab; allow 10" thick | SF | 20,378 | 28.00 | 570,584 |
| 158 | Reinforced concrete beams | SF | 62,326 | 2.00 | 124,652 |
| | ***Roof Construction*** | | | ***$11.70/SF*** | ***$2,157,186*** |
| **B2010** | **Exterior Walls** | | | | |
| 212 | Reinforced concrete loading dock wall; allow 10" thick | SF | 360 | 30.00 | 10,800 |
| | ***Exterior Walls*** | | | ***$0.06/SF*** | ***$10,800*** |
| | ***Concrete*** | | | ***$23.22/SF*** | ***$4,280,688*** |
| **04** | **Masonry** | | | | |
| **B2010** | **Exterior Walls** | | | | |
| 20 | Face brick veneer | SF | 67,420 | 30.00 | 2,022,600 |

# Medstar Southern Maryland Hospital - Addition / Renovation
## Preliminary Design Cost Estimate - Option C

Gross Floor Area: 184,347 SF
Rates Current At August 2013

Divisions/Elements/Item

| Description | | Unit | Qty | Rate | Total Cost |
|---|---|---|---|---|---|
| 19 | Face brick veneer to exposed retaining wall | SF | 3,620 | 30.00 | 108,600 |
| | ***Exterior Walls*** | | | ***$11.56/SF*** | ***$2,131,200*** |
| | ***Masonry*** | | | ***$11.56/SF*** | ***$2,131,200*** |
| **05** | **Metals** | | | | |
| **C1030** | **Fittings** | | | | |
| 101 | Allowance for loading dock ramp, including guardrail | SF | 150 | 150.00 | 22,500 |
| 136 | Allowance for miscellaneous metals / equipment supports | SF | 170,643 | 0.50 | 85,322 |
| | ***Fittings*** | | | ***$0.58/SF*** | ***$107,822*** |
| **C2010** | **Stair Construction** | | | | |
| 56 | Metal pan stair with concrete filled treads and landings, including guardrails | FT/R | 80 | 1,200.00 | 96,000 |
| 102 | Metal grate stair to loading dock; approx. 3'-0" rise | Item | | | 2,500 |
| | ***Stair Construction*** | | | ***$0.53/SF*** | ***$98,500*** |
| | ***Metals*** | | | ***$1.12/SF*** | ***$206,322*** |
| **06** | **Wood, Plastics, and Composites** | | | | |
| **C1030** | **Fittings** | | | | |
| 40 | Allowance for rough carpentry | SF | 170,643 | 0.50 | 85,322 |
| 41 | Allowance for wood blocking | SF | 170,643 | 1.00 | 170,643 |
| | ***Fittings*** | | | ***$1.39/SF*** | ***$255,965*** |
| | ***Wood, Plastics, and Composites*** | | | ***$1.39/SF*** | ***$255,965*** |
| **07** | **Thermal and Moisture Protection** | | | | |
| **A1030** | **Slab on Grade** | | | | |
| 37 | Vapor barrier | SF | 41,948 | 0.50 | 20,974 |
| 38 | Rigid insulation; allow 2" thick | SF | 41,948 | 2.00 | 83,896 |
| 14 | Expansion joint to existing slab | LF | 787 | 75.00 | 59,025 |
| | ***Slab on Grade*** | | | ***$0.89/SF*** | ***$163,895*** |
| **A2020** | **Basement Walls** | | | | |
| 35 | Waterproofing membrane to sub-grade walls | SF | 8,656 | 5.00 | 43,280 |
| 36 | Rigid insulation to sub-grade walls; allow 2" thick | SF | 8,656 | 2.00 | 17,312 |
| 34 | Drainage mat / protection board to retaining wall | SF | 6,020 | 5.00 | 30,100 |
| | ***Basement Walls*** | | | ***$0.49/SF*** | ***$90,692*** |
| **B1010** | **Floor Construction** | | | | |
| 27 | Fire-proofing - Excluded (assume not required) | SF | 34,352 | | Excl. |
| | ***Floor Construction*** | | | | |
| **B1020** | **Roof Construction** | | | | |
| 15 | Expansion joint to existing suspended roof slab | LF | 494 | 75.00 | 37,050 |

# Medstar Southern Maryland Hospital - Addition / Renovation
## Preliminary Design Cost Estimate - Option C

Divisions/Elements/Item

Gross Floor Area: 184,347 SF
Rates Current At August 2013

| Description | | Unit | Qty | Rate | Total Cost |
|---|---|---|---|---|---|
| 28 | Fire-proofing - Excluded (assume not required) | SF | 62,326 | | Excl. |
| | ***Roof Construction*** | | | ***$0.20/SF*** | ***$37,050*** |
| **B2010** | **Exterior Walls** | | | | |
| 24 | Exterior wall backup, including plywood sheathing, rigid insulation, and vapor barrier | SF | 67,420 | 12.00 | 809,040 |
| 13 | Expansion joint to existing facade | LF | 100 | 75.00 | 7,500 |
| | ***Exterior Walls*** | | | ***$4.43/SF*** | ***$816,540*** |
| **B3010** | **Roof Coverings** | | | | |
| 26 | Single-ply roofing membrane to concrete roof slab | SF | 62,326 | 8.00 | 498,608 |
| | ***Roof Coverings*** | | | ***$2.70/SF*** | ***$498,608*** |
| **C1030** | **Fittings** | | | | |
| 42 | Allowance for miscellaneous fire-stopping | SF | 170,643 | 1.00 | 170,643 |
| 43 | Allowance for miscellaneous caulking and sealing | SF | 170,643 | 1.00 | 170,643 |
| | ***Fittings*** | | | ***$1.85/SF*** | ***$341,286*** |
| | ***Thermal and Moisture Protection*** | | | ***$10.57/SF*** | ***$1,948,071*** |
| **08** | **Openings** | | | | |
| **B2010** | **Exterior Walls** | | | | |
| 99 | Glazed storefront entry facade | SF | 1,215 | 100.00 | 121,500 |
| | ***Exterior Walls*** | | | ***$0.66/SF*** | ***$121,500*** |
| **B2020** | **Exterior Windows** | | | | |
| 21 | Exterior window unit | SF | 6,024 | 100.00 | 602,400 |
| | ***Exterior Windows*** | | | ***$3.27/SF*** | ***$602,400*** |
| **B2030** | **Exterior Doors** | | | | |
| 70 | Double leaf glass entry door, including frame, finish and hardware | Pr | 3 | 6,000.00 | 18,000 |
| 63 | Double leaf door, including frame, finish and hardware | Pr | 4 | 3,200.00 | 12,800 |
| 65 | Single leaf door, including frame, finish and hardware | EA | 7 | 1,800.00 | 12,600 |
| 64 | Overhead coiling roller door, including frame, finish and hardware | EA | 2 | 7,500.00 | 15,000 |
| | ***Exterior Doors*** | | | ***$0.32/SF*** | ***$58,400*** |
| **C1010** | **Partitions** | | | | |
| 62 | Glazed vesitbule partition | SF | 420 | 50.00 | 21,000 |
| 175 | Interior window unit / viewing panel | SF | 5,494 | 50.00 | 274,700 |
| | ***Partitions*** | | | ***$1.60/SF*** | ***$295,700*** |
| **C1020** | **Interior Doors** | | | | |
| 71 | Double leaf glass entry door, including frame, finish and hardware | Pr | 1 | 5,500.00 | 5,500 |

# Medstar Southern Maryland Hospital - Addition / Renovation
## Preliminary Design Cost Estimate - Option C

Divisions/Elements/Item

Gross Floor Area: 184,347 SF
Rates Current At August 2013

| Description | | Unit | Qty | Rate | Total Cost |
|---|---|---|---|---|---|
| 66 | Double leaf door, including frame, finish and hardware | Pr | 31 | 3,200.00 | 99,200 |
| 67 | Single leaf door, including frame, finish and hardware | EA | 437 | 1,800.00 | 786,600 |
| 68 | Single leaf fire-rated door, including frame, finish and hardware | EA | 26 | 2,500.00 | 65,000 |
| 72 | Re-paint existing double leaf door and frame | Pr | 3 | 150.00 | 450 |
| 69 | Re-paint existing single leaf door and frame | EA | 25 | 75.00 | 1,875 |
| 217 | Allowance for hospital grade doors and hardware | SF | 170,643 | 1.50 | 255,965 |
| | ***Interior Doors*** | | | ***$6.59/SF*** | ***$1,214,590*** |
| | ***Openings*** | | | ***$12.44/SF*** | ***$2,292,590*** |
| **09** | **Finishings** | | | | |
| **B2010** | **Exterior Walls** | | | | |
| 22 | Gypboard wall lining to metal stud framing | SF | 67,420 | 1.75 | 117,985 |
| 23 | Gypboard wall lining on furring channel; retaining wall | SF | 2,400 | 4.25 | 10,200 |
| | ***Exterior Walls*** | | | ***$0.70/SF*** | ***$128,185*** |
| **C1010** | **Partitions** | | | | |
| 58 | Gypboard partition | SF | 193,868 | 8.00 | 1,550,944 |
| 59 | Gypboard partition; fire-rated | SF | 25,860 | 10.00 | 258,600 |
| 60 | Allowance to repair existing exterior wall as new partition | SF | 7,590 | 5.00 | 37,950 |
| | ***Partitions*** | | | ***$10.02/SF*** | ***$1,847,494*** |
| **C2020** | **Stair Finishes** | | | | |
| 51 | Concrete floor sealer to treads and landings | SF | 3,260 | 2.00 | 6,520 |
| | ***Stair Finishes*** | | | ***$0.04/SF*** | ***$6,520*** |
| **C3010** | **Wall Finishes** | | | | |
| 133 | Wall tile; public restroom | SF | 6,132 | 18.00 | 110,376 |
| 134 | Protective wall covering; corridors | SF | 38,288 | 7.50 | 287,160 |
| 224 | Full height wall mirror; gym | SF | 1,575 | 30.00 | 47,250 |
| 176 | Lead-lining to medical procedure room | SF | 7,080 | 25.00 | 177,000 |
| 61 | Paint finish to gypboard; partition lining | SF | 454,635 | 1.00 | 454,635 |
| 25 | Paint finish to gypboard; exterior wall lining | SF | 67,420 | 1.00 | 67,420 |
| 91 | Re-paint existing gypboard partition lining | SF | 11,295 | 1.50 | 16,943 |
| | ***Wall Finishes*** | | | ***$6.30/SF*** | ***$1,160,784*** |
| **C3020** | **Floor Finishes** | | | | |
| 44 | Sheet vinyl flooring, including base | SF | 146,519 | 8.00 | 1,172,152 |
| 49 | Floor tile, including base (public / staff restrooms) | SF | 3,002 | 16.00 | 48,032 |
| 47 | Feature floor tile, including base (ground floor lobby) | SF | 3,431 | 20.00 | 68,620 |
| 48 | Feature floor tile, including base (chapel / retail) | SF | 2,790 | 20.00 | 55,800 |
| 221 | Rubber sports flooring, including base (rehabilitation gym) | SF | 2,628 | 15.00 | 39,420 |
| 45 | Concrete floor sealer, including base | SF | 6,702 | 1.20 | 8,042 |

# Medstar Southern Maryland Hospital - Addition / Renovation
## Preliminary Design Cost Estimate - Option C

Divisions/Elements/Item

Gross Floor Area: 184,347 SF
Rates Current At August 2013

| Description | | Unit | Qty | Rate | Total Cost |
|---|---|---|---|---|---|
| 46 | Exposed concrete - no finish required | SF | 4,939 | | Excl. |
| | ***Floor Finishes*** | | | ***$7.55/SF*** | ***$1,392,066*** |
| **C3030** | **Ceiling Finishes** | | | | |
| 52 | ACT Ceiling system | SF | 140,568 | 5.50 | 773,124 |
| 53 | Gypboard ceiling; allow 10% of ceiling area | SF | 18,435 | 12.00 | 221,220 |
| 177 | Lead-lining to medical procedure room | SF | 2,752 | 30.00 | 82,560 |
| 54 | Paint finish to gypboard | SF | 18,435 | 1.20 | 22,122 |
| 55 | Paint finish to underside of exposed structure | SF | 11,641 | 1.50 | 17,462 |
| | ***Ceiling Finishes*** | | | ***$6.06/SF*** | ***$1,116,488*** |
| | ***Finishings*** | | | ***$30.66/SF*** | ***$5,651,537*** |
| **10** | **Specialties** | | | | |
| **C1030** | **Fittings** | | | | |
| 88 | Crash / bumper rail; corridors | LF | 9,572 | 40.00 | 382,880 |
| 89 | Corner guard; corridors | EA | 238 | 200.00 | 47,600 |
| 84 | Allowance for staff locker | EA | 60 | 300.00 | 18,000 |
| 87 | Allowance for fire extinguishers | EA | 42 | 350.00 | 14,700 |
| 108 | Allowance for janitor accessories | EA | 7 | 1,500.00 | 10,500 |
| 85 | Allowance for interior code signage | SF | 170,643 | 0.75 | 127,982 |
| 95 | Allowance for interior directional signage | SF | 170,643 | 1.00 | 170,643 |
| 86 | Allowance for exterior building signage | Item | | | 50,000 |
| 109 | Medical; allowance for miscellaneous fittings and accessories (procedural room) | EA | 14 | 7,500.00 | 105,000 |
| 110 | Medical; allowance for miscellaneous fittings and accessories (decon / ante / anest.) | EA | 4 | 7,500.00 | 30,000 |
| 111 | Medical; allowance for miscellaneous fittings and accessories (exam / prep room) | EA | 45 | 5,000.00 | 225,000 |
| 112 | Medical; allowance for miscellaneous fittings and accessories (patient room) | EA | 124 | 5,000.00 | 620,000 |
| 114 | Medical Support; allowance for miscellaneous fittings and accessories (support / admin / office) | EA | 26 | 2,500.00 | 65,000 |
| 115 | Medical Support; allowance for miscellaneous fittings and accessories (soiled / linen / clean) | EA | 17 | 5,000.00 | 85,000 |
| 116 | Medical Support; allowance for miscellaneous fittings and accessories (nurse station) | EA | 18 | 1,000.00 | 18,000 |
| 117 | Amenities / Staff; allowance for miscellaneous fittings and accessories (restroom) | EA | 109 | 2,500.00 | 272,500 |
| 118 | Amenities / Staff; allowance for miscellaneous fittings and accessories (staff room) | EA | 4 | 2,500.00 | 10,000 |
| 119 | Amenities / Staff; allowance for miscellaneous fittings and accessories (locker room) | EA | 2 | 5,000.00 | 10,000 |
| 120 | Amenities / Staff; allowance for miscellaneous fittings and accessories (nourishment) | EA | 6 | 5,000.00 | 30,000 |

# Medstar Southern Maryland Hospital - Addition / Renovation
## Preliminary Design Cost Estimate - Option C

Divisions/Elements/Item

Gross Floor Area: 184,347 SF
Rates Current At August 2013

| Description | | Unit | Qty | Rate | Total Cost |
|---|---|---|---|---|---|
| 122 | Amenities / Staff; allowance for miscellaneous fittings and accessories (lounge / comfort) | EA | 6 | 5,000.00 | 30,000 |
| 123 | Amenities / Staff; allowance for miscellaneous fittings and accessories (janitor / housekeeping) | EA | 7 | 2,500.00 | 17,500 |
| 222 | Amenities / Staff; allowance for miscellaneous fittings and accessories (gym) | EA | 2 | 10,000.00 | 20,000 |
| 124 | Storage / Plant; allowance for miscellaneous fittings and accessories (storage / med supply) | EA | 22 | 2,500.00 | 55,000 |
| 125 | Storage / Plant; allowance for miscellaneous fittings and accessories (plant room) | EA | 12 | 500.00 | 6,000 |
| 126 | Storage / Plant; allowance for miscellaneous fittings and accessories (dirty / clean / cart wash) | EA | 2 | 5,000.00 | 10,000 |
| 127 | Storage / Plant; allowance for miscellaneous fittings and accessories (shipping / receiving) | EA | 1 | 2,500.00 | 2,500 |
| 128 | Other; allowance for miscellaneous fittings and accessories (vestibule / waiting area) | EA | 9 | 10,000.00 | 90,000 |
| 129 | Other; allowance for miscellaneous fittings and accessories (shell) | EA | 2 | | Excl. |
| 223 | Other; allowance for miscellaneous fittings and accessories (labor & delivery) | SF | 9,418 | 10.00 | 94,180 |
| | ***Fittings*** | | | ***$14.20/SF*** | ***$2,617,985*** |
| | ***Specialties*** | | | ***$14.20/SF*** | ***$2,617,985*** |
| **11** | **Equipment** | | | | |
| **E1010** | **Commercial Equipment** | | | | |
| 82 | Appliances to staff room; including refrigerator, dishwasher, and microwave | EA | 4 | 2,500.00 | 10,000 |
| 83 | Appliances to nourishment area; including refrigerator, and microwave | EA | 6 | 1,500.00 | 9,000 |
| 94 | Food service equipment - Excluded (furnished and installed by Owner) | Item | | | Excl. |
| | ***Commercial Equipment*** | | | ***$0.10/SF*** | ***$19,000*** |
| **E1020** | **Institutional Equipment** | | | | |
| 93 | Medical equipment - Excluded (furnished an installed by Owner) | Item | | | Excl. |
| | ***Institutional Equipment*** | | | | |
| **E1030** | **Vehicular Equipment** | | | | |
| 100 | Dock bumper | EA | 20 | 250.00 | 5,000 |
| | ***Vehicular Equipment*** | | | ***$0.03/SF*** | ***$5,000*** |
| | ***Equipment*** | | | ***$0.13/SF*** | ***$24,000*** |

# Medstar Southern Maryland Hospital - Addition / Renovation

## Preliminary Design Cost Estimate - Option C

Divisions/Elements/Item

Gross Floor Area: 184,347 SF
Rates Current At August 2013

| Description | | Unit | Qty | Rate | Total Cost |
|---|---|---|---|---|---|
| **12** | **Furnishings** | | | | |
| **E2010** | **Fixed Furnishings** | | | | |
| 73 | Casework; base cabinet unit (nourishment) | LF | 72 | 450.00 | 32,400 |
| 74 | Casework; base cabinet unit (staff room) | LF | 67 | 350.00 | 23,450 |
| 225 | Casework; base cabinet unit (patient lounge) | LF | 35 | 350.00 | 12,250 |
| 106 | Casework; base cabinet unit to exam / prep room (allow 6'-0" per room) | LF | 270 | 450.00 | 121,500 |
| 75 | Casework; nurse station desk | LF | 771 | 500.00 | 385,500 |
| 76 | Casework; overhead cabinet unit (nourishment) | LF | 72 | 250.00 | 18,000 |
| 77 | Casework; overhead cabinet unit (staff room) | LF | 67 | 200.00 | 13,400 |
| 107 | Casework; overhead cabinet unit to exam / prep room (allow 6'-0" per room) | LF | 270 | 250.00 | 67,500 |
| 105 | Commercial fit-out to retail spaces - Excluded (by Owner) | Item | | | Excl. |
| 98 | Allowance for main reception desk | Item | | | 10,000 |
| 137 | Allowance for miscellaneous casework not identified | SF | 170,643 | 1.00 | 170,643 |
| | ***Fixed Furnishings*** | | | ***$4.64/SF*** | ***$854,643*** |
| **E2020** | **Movable Furnishings** | | | | |
| 97 | FF&E - Excluded (by Owner) | Item | | | Excl. |
| 103 | Loose furniture and equipment to waiting / lobby areas - Excluded (by Owner) | Item | | | Excl. |
| 104 | Loose furniture and equipment to patient / staff lounge - Excluded (by Owner) | Item | | | Excl. |
| 138 | Loose medical equipment, casework, and furniture - Excluded (by Owner) | Item | | | Excl. |
| | ***Movable Furnishings*** | | | | |
| | ***Furnishings*** | | | ***$4.64/SF*** | ***$854,643*** |
| **13** | **Special Construction** | | | | |
| **F1030** | **Special Construction Systems** | | | | |
| 78 | Lobby; allowance for complete fit-out, including partitions, doors, casework, fittings and accessories | SF | 3,431 | 10.00 | 34,310 |
| 79 | Admin / Security Offices; allowance for complete fit-out, including partitions, doors, casework, fittings and accessories | SF | 5,256 | 25.00 | 131,400 |
| 80 | Chapel / Retail; allowance for complete fit-out, including partitions, doors, casework, fittings and accessories | SF | 2,790 | 50.00 | 139,500 |
| 81 | Family Waiting / Consultation; allowance for complete fit-out, including partitions, doors, casework, fittings and accessories | SF | 3,945 | 25.00 | 98,625 |
| | ***Special Construction Systems*** | | | ***$2.19/SF*** | ***$403,835*** |
| | ***Special Construction*** | | | ***$2.19/SF*** | ***$403,835*** |
| **14** | **Conveying Equipment** | | | | |
| **D1010** | **Elevators & Lifts** | | | | |
| 211 | (4) Stop passenger elevator; emergency department | EA | 4 | 180,000.00 | 720,000 |

# Medstar Southern Maryland Hospital - Addition / Renovation
## Preliminary Design Cost Estimate - Option C

Divisions/Elements/Item

Gross Floor Area: 184,347 SF
Rates Current At August 2013

| Description | Unit | Qty | Rate | Total Cost |
|---|---|---|---|---|
| 214 Convert existing (2) stop elevator to (4) stop | EA | 2 | 25,000.00 | 50,000 |
| ***Elevators & Lifts*** | | | ***$4.18/SF*** | ***$770,000*** |
| ***Conveying Equipment*** | | | ***$4.18/SF*** | ***$770,000*** |
| **21 Fire Suppression** | | | | |
| **D4010 Sprinklers** | | | | |
| 198 Additional areas | SF | 83,213 | 3.90 | 324,531 |
| 199 Renovated areas | SF | 87,430 | 3.90 | 340,977 |
| 226 Shell space | SF | 13,704 | 3.90 | 53,446 |
| ***Sprinklers*** | | | ***$3.90/SF*** | ***$718,954*** |
| ***Fire Suppression*** | | | ***$3.90/SF*** | ***$718,954*** |
| **22 Plumbing** | | | | |
| **D2090 Other Plumbing Systems** | | | | |
| 196 Additional areas | SF | 83,213 | 23.00 | 1,913,899 |
| 197 Renovated areas | SF | 87,430 | 23.00 | 2,010,890 |
| 227 Shell space | SF | 13,704 | | Excl. |
| ***Other Plumbing Systems*** | | | ***$21.29/SF*** | ***$3,924,789*** |
| ***Plumbing*** | | | ***$21.29/SF*** | ***$3,924,789*** |
| **23 Heating, Ventilating, and Air Conditioning** | | | | |
| **D3090 Other HVAC Systems & Equipment** | | | | |
| 200 Additional areas | SF | 83,213 | 59.00 | 4,909,567 |
| 201 Renovated areas | SF | 87,430 | 59.00 | 5,158,370 |
| 228 Shell space | SF | 13,704 | | Excl. |
| ***Other HVAC Systems & Equipment*** | | | ***$54.61/SF*** | ***$10,067,937*** |
| ***Heating, Ventilating, and Air Conditioning*** | | | ***$54.61/SF*** | ***$10,067,937*** |
| **25 Integrated Automation** | | | | |
| **D3060 Controls & Instrumentations** | | | | |
| 202 Additional areas | SF | 83,213 | | Incl. |
| 203 Renovated areas | SF | 87,430 | | Incl. |
| 229 Shell space | SF | 13,704 | | Excl. |
| ***Controls & Instrumentations*** | | | | |
| ***Integrated Automation*** | | | | |
| **26 Electrical** | | | | |
| **D5090 Other Electrical Systems** | | | | |
| 204 Additional areas | SF | 83,213 | 36.00 | 2,995,668 |
| 205 Renovated areas | SF | 87,430 | 36.00 | 3,147,480 |

# Medstar Southern Maryland Hospital - Addition / Renovation
## Preliminary Design Cost Estimate - Option C

Gross Floor Area: 184,347 SF
Rates Current At August 2013

Divisions/Elements/Item

| Description | Unit | Qty | Rate | Total Cost |
|---|---|---|---|---|
| 230 Shell space | SF | 13,704 | | Excl. |
| ***Other Electrical Systems*** | | | ***$33.32/SF*** | ***$6,143,148*** |
| ***Electrical*** | | | ***$33.32/SF*** | ***$6,143,148*** |
| **27 Communications** | | | | |
| **D5030 Communications & Security** | | | | |
| 206 Additional areas | SF | 83,213 | 13.00 | 1,081,769 |
| 207 Renovated areas | SF | 87,430 | 13.00 | 1,136,590 |
| 231 Shell space | SF | 13,704 | | Excl. |
| ***Communications & Security*** | | | ***$12.03/SF*** | ***$2,218,359*** |
| ***Communications*** | | | ***$12.03/SF*** | ***$2,218,359*** |
| **28 Electronic Safety and Security** | | | | |
| **D5030 Communications & Security** | | | | |
| 208 Additional areas | SF | 83,213 | 11.00 | 915,343 |
| 209 Renovated areas | SF | 87,430 | 11.00 | 961,730 |
| 232 Shell space | SF | 13,704 | 2.00 | 27,408 |
| ***Communications & Security*** | | | ***$10.33/SF*** | ***$1,904,481*** |
| ***Electronic Safety and Security*** | | | ***$10.33/SF*** | ***$1,904,481*** |
| **31 Earthwork** | | | | |
| **A1030 Slab on Grade** | | | | |
| 178 Imported granular fill as sub-base | CY | 1,295 | 30.00 | 38,850 |
| 179 Trim and compact subgrade | SF | 41,948 | 0.25 | 10,487 |
| ***Slab on Grade*** | | | ***$0.27/SF*** | ***$49,337*** |
| **A2020 Basement Walls** | | | | |
| 216 Deep foundation systems - Excluded | Item | | | Excl. |
| ***Basement Walls*** | | | | |
| **G1030 Site Earthwork** | | | | |
| 160 Imported fill to proposed levels | CY | 9,516 | 35.00 | 333,060 |
| 161 Mass excavation to proposed levels | CY | 1,530 | 6.00 | 9,180 |
| 162 Remove and dispose excavated spoil from site | CY | 1,530 | 15.00 | 22,950 |
| 39 Subsoil drain to retaining / foundation wall | LF | 960 | 18.00 | 17,280 |
| 163 Allowance for fine grading | SF | 107,901 | 0.25 | 26,975 |
| 172 Construction entrance | EA | 2 | 5,000.00 | 10,000 |
| 173 Dust control | Item | | | 10,000 |
| 174 Allowance for soil erosion and sediment controls | Item | | | 20,000 |
| ***Site Earthwork*** | | | ***$2.44/SF*** | ***$449,445*** |

# Medstar Southern Maryland Hospital - Addition / Renovation

## Preliminary Design Cost Estimate - Option C

Gross Floor Area: 184,347 SF
Rates Current At August 2013

Divisions/Elements/Item

| Description | Unit | Qty | Rate | Total Cost |
|---|---|---|---|---|
| **G2050 Landscaping** | | | | |
| 166 Imported planting material | CY | 1,483 | 35.00 | 51,905 |
| ***Landscaping*** | | | ***$0.28/SF*** | ***$51,905*** |
| ***Earthwork*** | | | ***$2.99/SF*** | ***$550,687*** |
| **32 Exterior Improvements** | | | | |
| **G2020 Parking Lots** | | | | |
| 154 Bituminous concrete pavement, including sub-base | SY | 6,305 | 30.00 | 189,150 |
| 155 Bituminous top and finish course to existing pavement | SY | 2,990 | 20.00 | 59,800 |
| 156 Concrete curb and gutter | LF | 2,722 | 30.00 | 81,660 |
| 159 Allowance for pavement markings | SF | 59,459 | 0.15 | 8,919 |
| ***Parking Lots*** | | | ***$1.84/SF*** | ***$339,529*** |
| **G2030 Pedestrian Paving** | | | | |
| 182 Reinforced concrete pavement; allow 6" thick | SF | 9,605 | 9.00 | 86,445 |
| ***Pedestrian Paving*** | | | ***$0.47/SF*** | ***$86,445*** |
| **G2040 Site Development** | | | | |
| 165 Reinforced concrete site retaining wall, including footing | SF | 2,960 | 50.00 | 148,000 |
| 164 Reinforced concrete helipad | SF | 3,141 | 15.00 | 47,115 |
| 184 Reinforced concrete equipment pad; transformers (2) | Item | | | 3,000 |
| 188 Reinforced concrete equipment pad; propane / oxygen tanks (2) | Item | | | 3,000 |
| 189 Reinforced concrete equipment pad; generator | Item | | | 1,050 |
| 190 Chain link plant enclosure; propane / oxygen tanks | LF | 100 | 45.00 | 4,500 |
| 191 Chain link plant enclosure; generator | LF | 100 | 45.00 | 4,500 |
| 187 Linemarking to helipad | Item | | | 1,500 |
| 180 Allowance for modular retaining wall to helipad | SF | 1,218 | 25.00 | 30,450 |
| 181 Allowance for helipad safety net including structrual framing | SF | 870 | 40.00 | 34,800 |
| 193 Allowance for new entry canopy | SF | 1,700 | 50.00 | 85,000 |
| 183 Allowance for miscellaneous site furniture | Item | | | 10,000 |
| ***Site Development*** | | | ***$2.02/SF*** | ***$372,915*** |
| **G2050 Landscaping** | | | | |
| 167 Allowance for landscaping; seeding | SF | 9,605 | 0.35 | 3,362 |
| 194 Allowance for landscaping; plantings | SF | 28,814 | 5.00 | 144,070 |
| 195 Allowance for landscaping; trees | EA | 5 | 1,500.00 | 7,500 |
| ***Landscaping*** | | | ***$0.84/SF*** | ***$154,932*** |
| ***Exterior Improvements*** | | | ***$5.17/SF*** | ***$953,821*** |

# Medstar Southern Maryland Hospital - Addition / Renovation

## Preliminary Design Cost Estimate - Option C

Gross Floor Area: 184,347 SF
Rates Current At August 2013

Divisions/Elements/Item

| Description | | Unit | Qty | Rate | Total Cost |
|---|---|---|---|---|---|
| **33** | **Utilities** | | | | |
| **G1020** | **Site Demolition and Relocations** | | | | |
| 141 | Remove and dispose existing light post | EA | 16 | 500.00 | 8,000 |
| 130 | Relocate existing transformers | Item | | | 25,000 |
| 135 | Relocate existing generator | Item | | | 15,000 |
| 131 | Relocate existing propane and oxygen tanks | Item | | | 10,000 |
| 235 | Replacement of existing transformers, generator, oxygen / propane tanks, etc - Excluded (assume not required) | Item | | | Excl. |
| 233 | Site pole lighting | EA | 16 | 5,000.00 | 80,000 |
| 234 | Allowance to re-work existing site storm drainage | SF | 95,164 | 1.00 | 95,164 |
| 132 | Allowance for site utilities diversions not identified | Item | | | 150,000 |
| | ***Site Demolition and Relocations*** | | | ***$2.08/SF*** | ***$383,164*** |
| | ***Utilities*** | | | ***$2.08/SF*** | ***$383,164*** |
| | ***ESTIMATED NET COST*** | | | ***$270.15/SF*** | ***$49,800,969*** |

RLB | Rider Levett Bucknall

Medstar Southern Maryland Hospital
Clinton, MD

Marshall Valuation Service Analysis

INDEX

1.0 MARSHALL VALUATION SERVICE ANALYSIS

2.0 ESTIMATED PROJECT COSTS

3.0 FINAL SUMMARY

# 1.0 MARSHALL VALUATION SERVICE ANALYSIS

| | |
|---|---|
| Project Name | Medstar Southern Maryland Hospital |
| Project Location | Clinton, MD |
| Project Description | Hospital Addition / Renovation |
| Sheet. | **MARSHALL VALUATION SERVICE ANALYSIS - New Construction** |

RLB Rider Levett Bucknall

Date **10/3/2013**

| | | SECTION I | | SECTION II | | SECTION III | | TOTALS |
|---|---|---|---|---|---|---|---|---|
| **1.** | **PROJECT DESCRIPTION** | | | | | | | |
| a) | Occupancy | Basement | | General Floors | | General (core & shell) | | |
| b) | Building Class and Quality | A | Good | A | Good | A | Good | |
| c) | Exterior Wall | Concrete / brick | | Brick / Metal / Glass | | Brick / Metal / Glass | | |
| d) | No. of Stories and Height per Story (no. and lin. ft.) | 1 | 16'-0" | 3 | 15'-0" | 1 | 15'-0" | |
| e) | Total Floor Area (sq. ft.) | 21,955 | | 112,927 | | 30,533 | | |
| f) | Average Floor Area (sq. ft.) | 21,955 | | 37, 642 | | 30,533 | | |
| g) | Average Perimeter (lin. ft.) | 1,258 | | 1,135 | | 1,008 | | |
| h) | Age and Condition (years) | N/A | N/A | N/A | N/A | N/A | N/A | |
| i) | Region (western / central / eastern) | Eastern | | Eastern | | Eastern | | |
| j) | Climate (mild / moderate / extreme) | Moderate | | Moderate | | Moderate | | |
| **2.** | **BASE COSTS** | | | | | | | |
| a) | *Base Square Foot Cost (sec. 15.19/24)* | *$144.83* | | *$336.71* | | *$336.71* | | |
| **3.** | **SQUARE FOOT COST REFINEMENTS** | | | | | | | |
| a) | Heating, Ventilation, and Cooling (sec. 15.25) | N/A | | N/A | | -$35.75 | | |
| b) | Elevators (sec. 15.36) | $0.81 | | incl | | incl | | |
| c) | Other: fire sprinkler system (sec. 15.37) | $3.28 | | $2.94 | | $2.82 | | |
| d) | Other: pneumatic conveyor system (sec. 15.37) | N/A | | $3.14 | | N/A | | |
| e) | *Total Base Cost* | *$148.92* | | *$342.79* | | *$303.78* | | |
| **4.** | **ADJUSTMENTS** | | | | | | | |
| a) | Adjustment for Differential Cost by Department | *0.662* | | *1.100* | | *0.506* | | |
| b) | *Total Adjusted Base Cost* | *$98.58* | | *$377.07* | | *$153.80* | | |
| **5.** | **HEIGHT AND SIZE REFINEMENTS** | | | | | | | |
| a) | Number of Stories - Multiplier (sec. 15.19) | 1.00 | | 1.00 | | 1.001 | | |
| b) | Story Height - Multiplier (sec. 15.38) | 1.09 | | 1.07 | | 1.07 | | |
| c) | Floor Area / Perimeter - Multiplier (sec 15.38) | 0.99 | | 0.92 | | 0.93 | | |
| d) | Total Height and Size Refinements | 1.081 | | 0.987 | | 0.997 | | |
| **6.** | **REFINED SQUARE FOOT COST** | | | | | | | |
| a) | *Refined Square Foot Cost* | *$106.58* | | *$372.05* | | *$153.31* | | |
| **5.** | **UPDATE / LOCATION** | | | | | | | |
| a) | Current Cost - Multiplier (sec. 99.03) | 1.07 | | 1.07 | | 1.07 | | |
| b) | Local - Multiplier (sec. 99.08) | 1.09 | | 1.09 | | 1.09 | | |
| **7.** | **FINAL CALCULATIONS** | | | | | | | |
| a) | Final Square Foot Cost | 124.30 | | 433.92 | | 178.81 | | |
| b) | Total Floor Area | 21,955 | | 112,927 | | 30,533 | | |
| c) | MVS Building Costs | 2,728,987 | | 49,001,379 | | 5,459,559 | | |
| | ***TOTAL MVS BUILDING COST*** | | | | | | | ***$57,189,925*** |
| | ***TOTAL FLOOR AREA*** | | | | | | | ***165,415*** |
| | ***FINAL MVS BUILDING COST PER SQ. FT.*** | | | | | | | ***$345.74*** |
| | ***FINAL ESTIMATED COST PER SQ. FT.*** | | | | | | | ***409.36*** |
| | ***DELTA*** | | | | | | | ***63.62*** |

| | |
|---|---|
| Project Name | Medstar Southern Maryland Hospital |
| Project Location | Clinton, MD |
| Project Description | Hospital Addition / Renovation |
| Sheet: | **MARSHALL VALUATION SERVICE ANALYSIS - Renovation** |

RLB Rider Levett Bucknall

Date: **10/3/2013**

| | | | SECTION I | | SECTION II | | SECTION III | | TOTALS |
|---|---|---|---|---|---|---|---|---|---|
| **1.** | **PROJECT DESCRIPTION** | | | | | | | | |
| a) | Occupancy | | General Floor | | | | | | |
| b) | Building Class and Quality | | A | Good | | | | | |
| c) | Exterior Wall | | N/A | | | | | | |
| d) | No. of Stories and Height per Story (no. and lin. ft.) | | 1 | 15'-0" | | | | | |
| e) | Total Floor Area (sq. ft.) | | 42,772 | | | | | | |
| f) | Average Floor Area (sq. ft.) | | 42,772 | | | | | | |
| g) | Average Perimeter (lin. ft.) | | 972 | | | | | | |
| h) | Age and Condition (years) | | N/A | N/A | | | | | |
| i) | Region (western / central / eastern) | | Eastern | | | | | | |
| j) | Climate (mild / moderate / extreme) | | Moderate | | | | | | |
| **2.** | **BASE COSTS** | | | | | | | | |
| a) | *Base Square Foot Cost (sec. 15.24)* | | *$336.71* | | | | | | |
| **3.** | **SQUARE FOOT COST REFINEMENTS** | | | | | | | | |
| a) | Heating, Ventilation, and Cooling (sec. 15.25) | | N/A | | | | | | |
| b) | Elevators (sec. 15.36) | | Incl | | | | | | |
| c) | Other: fire sprinkler system (sec. 15.37) | | $3.47 | | | | | | |
| d) | Other: pneumatic conveyor system (sec. 15.37) | | N/A | | | | | | |
| e) | | *Total Base Cost* | *$340.18* | | | | | | |
| **4.** | **ADJUSTMENTS** | | | | | | | | |
| a) | Adjustment for Differential Cost by Department | | *1.099* | | | | | | |
| b) | Adjustment for Remodel / Repair (sec. 99.01) | | *1.150* | | | | | | |
| c) | | *Total Adjusted Base Cost* | *$429.94* | | | | | | |
| **5.** | **HEIGHT AND SIZE REFINEMENTS** | | | | | | | | |
| a) | Number of Stories - Multiplier (sec. 15.19) | | 1.00 | | | | | | |
| b) | Story Height - Multiplier (sec. 15.38) | | 1.07 | | | | | | |
| c) | Floor Area / Perimeter - Multiplier (sec. 15.38) | | 0.90 | | | | | | |
| d) | Total Height and Size Refinements | | 0.959 | | | | | | |
| **6.** | **REFINED SQUARE FOOT COST** | | | | | | | | |
| a) | *Refined Square Foot Cost* | | *$412.26* | | | | | | |
| **5.** | **UPDATE / LOCATION** | | | | | | | | |
| a) | Current Cost - Multiplier (sec. 99.03) | | 1.07 | | | | | | |
| b) | Local - Multiplier (sec. 99.08) | | 1.09 | | | | | | |
| **7.** | **FINAL CALCULATIONS** | | | | | | | | |
| a) | Final Square Foot Cost | | 480.82 | | | | | | |
| b) | Total Floor Area | | 42,772 | | | | | | |
| c) | MVS Building Costs | | 20,565,738 | | | | | | |
| | *TOTAL MVS BUILDING COST* | | | | | | | | *$20,565,738* |
| | *TOTAL FLOOR AREA* | | | | | | | | *42,772* |
| | *FINAL MVS BUILDING COST PER SQ. FT.* | | | | | | | | *$480.82* |
| | *FINAL ESTIMATED COST PER SQ. FT.* | | | | | | | | *332.50* |
| | *DELTA* | | | | | | | | *-148.32* |

| | |
|---|---|
| Project Name | Medstar Southern Maryland Hospital |
| Project Location | Clinton, MD |
| Project Description | Hospital Addition / Renovation |
| Sheet | **MARSHALL VALUATION SERVICE ANALYSIS - Surgery Department** |

RLB Rider Levett Bucknall

Date **10/3/2013**

| | | SECTION I | | SECTION II | | SECTION III | | TOTALS |
|---|---|---|---|---|---|---|---|---|
| **1. PROJECT DESCRIPTION** | | | | | | | | |
| a) | Occupancy | New Construction | | Renovation | | | | |
| b) | Building Class and Quality | A | Good | A | Good | | | |
| c) | Exterior Wall | Brick / Metal / Glass | | Brick / Metal / Glass | | | | |
| d) | No. of Stories and Height per Story (no. and lin. ft.) | 1 | 15'-0" | 1 | 15'-0" | | | |
| e) | Total Floor Area (sq. ft.) | 9,612 | | 14,531 | | | | |
| f) | Average Floor Area (sq. ft.) | 9,612 | | 14,531 | | | | |
| g) | Average Perimeter (lin. ft.) | 400 | | 540 | | | | |
| h) | Age and Condition (years) | N/A | N/A | N/A | N/A | | | |
| i) | Region (western / central / eastern) | Eastern | | Eastern | | | | |
| j) | Climate (mild / moderate / extreme) | Moderate | | Moderate | | | | |
| **2. BASE COSTS** | | | | | | | | |
| a) | *Base Square Foot Cost (sec. 15.24)* | *$336.71* | | *$336.71* | | | | |
| **3. SQUARE FOOT COST REFINEMENTS** | | | | | | | | |
| a) | Heating, Ventilation, and Cooling (sec. 15.25) | N/A | | N/A | | | | |
| b) | Elevators (sec. 15.36) | N/A | | N/A | | | | |
| c) | Other: fire sprinkler system (sec. 15.37) | $4.63 | | $4.31 | | | | |
| d) | Other: pneumatic conveyor system (sec. 15.37) | N/A | | N/A | | | | |
| e) | *Total Base Cost* | *$341.34* | | *$341.02* | | | | |
| **4. ADJUSTMENTS** | | | | | | | | |
| a) | Adjustment for Differential Cost by Department | *1.318* | | *1.439* | | | | |
| b) | Adjustment for Remodel / Repair (sec. 99.01) | *1.000* | | *1.150* | | | | |
| c) | *Total Adjusted Base Cost* | *$449.92* | | *$564.14* | | | | |
| **5. HEIGHT AND SIZE REFINEMENTS** | | | | | | | | |
| a) | Number of Stories - Multiplier (sec. 15.19) | 1.00 | | 1.00 | | | | |
| b) | Story Height - Multiplier (sec. 15.38) | 1.07 | | 1.07 | | | | |
| c) | Floor Area / Perimeter - Multiplier (sec 15.38) | 0.95 | | 0.94 | | | | |
| d) | Total Height and Size Refinements | 1.014 | | 1.007 | | | | |
| **6. REFINED SQUARE FOOT COST** | | | | | | | | |
| a) | *Refined Square Foot Cost* | *$456.44* | | *$568.09* | | | | |
| **5. UPDATE / LOCATION** | | | | | | | | |
| a) | Current Cost - Multiplier (sec. 99.03) | 1.07 | | 1.07 | | | | |
| b) | Local - Multiplier (sec. 99.08) | 1.09 | | 1.09 | | | | |
| **7. FINAL CALCULATIONS** | | | | | | | | |
| a) | Final Square Foot Cost | 532.34 | | 662.56 | | | | |
| b) | Total Floor Area | 9,612 | | 14,531 | | | | |
| c) | MVS Building Costs | 5,116,860 | | 9,627,687 | | | | |
| | ***TOTAL MVS BUILDING COST*** | | | | | | | ***$14,744,546*** |
| | ***TOTAL FLOOR AREA*** | | | | | | | ***24,143*** |
| | ***FINAL MVS BUILDING COST PER SQ. FT.*** | | | | | | | ***$610.72*** |
| | ***FINAL ESTIMATED COST PER SQ. FT.*** | | | | | | | ***407.54*** |
| | ***DELTA*** | | | | | | | ***-203.18*** |

# 2.0 ESTIMATED PROJECT COSTS

Project Name: Medstar Southern Maryland Hospital
Project Location: Clinton, MD
Project Description: Hospital Addition / Renovation
Sheet: **ESTIMATED PROJECT COST - New Construction**

RLB Rider Levett Bucknall

Date: **10/3/2013**

| | | | | TOTALS |
|---|---|---|---|---|
| | **NEW CONSTRUCTION** | | | |
| | Total Floor Area | 165,415 | | |
| **1.** | **BASE PROJECT COSTS** | | | |
| a) | Building | | | $72,629,152 |
| b) | Fixed Equipment | | | Incl |
| c) | Site Work | | | $3,183,110 |
| d) | Architects Fees | | | $6,135,902 |
| e) | Permits | | | $288,750 |
| f) | Capitalized Construction Interest | | | $4,687,225 |
| | **SUBTOTAL** | | | **$86,924,139** |
| **2.** | **COST ADJUSTMENTS** | | | |
| a) | Phasing / Temporary Works | $2,228,987 | $137,811 | $2,366,798 |
| b) | Escalation | $9,474,561 | $585,781 | $10,060,342 |
| c) | Demolition / Hazmat | $131,710 | $8,143 | $139,853 |
| d) | Piled Foundation System | $2,404,500 | $148,662 | $2,553,162 |
| e) | Major Earthworks | $440,818 | $27,254 | $468,072 |
| f) | Site Earthworks (demolition, rough grading, etc) | $269,802 | $16,681 | $286,483 |
| g) | Site Development (parking, helipad, paving, etc) | $1,016,950 | $62,875 | $1,079,825 |
| h) | Landscaping | $232,144 | $14,353 | $246,497 |
| i) | Site Utilities Demolition / Relocations | $238,658 | $14,755 | $253,413 |
| j) | Markups on Above Adjustments (items "c" to "i") | $1,653,338 | $102,221 | $1,755,559 |
| | **SUBTOTAL** | **$18,091,468** | **$1,118,537** | **$19,210,005** |
| | ***TOTAL ESTIMATED COST*** | | | **$86,924,139** |
| | ***TOTAL COST ADJUSTMENTS*** | | | **$19,210,005** |
| | ***ADJUSTED ESTIMATED PROJECT COST*** | | | **$67,714,135** |
| | ***FINAL ESTIMATED COST PER SQ. FT.*** | | | **$409.36** |

*** *This sheet is not intended to represent the final total project cost. Costs contained within this sheet are selected project costs used for comparison to the Marshall Valuation Service benchmark only.*

| | |
|---|---|
| *Project Name:* | *Medstar Southern Maryland Hospital* |
| *Project Location:* | *Clinton, MD* |
| *Project Description:* | *Hospital Addition / Renovation* |
| *Sheet:* | ***ANTICIPATED PROJECT COST - Renovation*** |

RLB Rider Levett Bucknall

*Date:* ***10/3/2013***

| | | | | | TOTALS |
|---|---|---|---|---|---|
| | **NEW CONSTRUCTION** | | | | |
| | Total Floor Area | | 42,772 | | |
| **1.** | **BASE PROJECT COSTS** | | | | |
| a) | Building | | | | $15,462,738 |
| b) | Fixed Equipment | | | | Incl |
| c) | Site Work | | | | N/A |
| d) | Architects Fees | | | | $1,248,068 |
| e) | Permits | | | | $96,250 |
| f) | Capitalized Construction Interest | | | | $892,805 |
| | | **SUBTOTAL** | | | **$17,699,861** |
| **2.** | **COST ADJUSTMENTS** | | | | |
| a) | Phasing / Temporary Works | | $474,553 | $27,400 | $501,953 |
| b) | Escalation | | $2,017,136 | $116,468 | $2,133,604 |
| c) | Demolition / Hazmat | | $540,400 | $31,202 | $571,602 |
| d) | Underpinning | | $50,000 | $2,887 | $52,887 |
| e) | Other; | | N/A | N/A | N/A |
| f) | Other; | | N/A | N/A | N/A |
| g) | Other; | | N/A | N/A | N/A |
| h) | Other; | | N/A | N/A | N/A |
| i) | Other; | | N/A | N/A | N/A |
| j) | Markups on Above Adjustments (items "c" to "d") | | $206,170 | $11,904 | $218,074 |
| | | **SUBTOTAL** | **$3,288,259** | **$189,861** | **$3,478,120** |
| | ***TOTAL ESTIMATED COST*** | | | | **$17,699,861** |
| | ***TOTAL COST ADJUSTMENTS*** | | | | **$3,478,120** |
| | ***ADJUSTED ESTIMATED PROJECT COST*** | | | | **$14,221,741** |
| | ***FINAL ESTIMATED COST PER SQ. FT.*** | | | | **$332.50** |

*** *This sheet is not intended to represent the final total project cost. Costs contained within this sheet are selected project costs used for comparison to the Marshall Valuation Service benchmark only.*

Project Name. Medstar Southern Maryland Hospital
Project Location. Clinton, MD
Project Description Hospital Addition / Renovation
Sheet: **ANTICIPATED PROJECT COST - Surgery Department**

RLB Rider Levett Bucknall

Date: **10/3/2013**

| | | | | TOTALS |
|---|---|---|---|---|
| **NEW CONSTRUCTION** | | | | |
| | Total Floor Area | 24,143 | | |
| **1. BASE PROJECT COSTS** | | | | |
| a) | Building | | | $10,389,848 |
| b) | Fixed Equipment | | | Incl |
| c) | Site Work | | | N/A |
| d) | Architects Fees | | | $793,777 |
| e) | Permits | | | $58,298 |
| f) | Capitalized Construction Interest | | | $633,358 |
| | **SUBTOTAL** | | | **$11,875,281** |
| **2. COST ADJUSTMENTS** | | | | |
| a) | Phasing / Tempoarary Works | $318,870 | $19,438 | $338,308 |
| b) | Escalation | $1,355,198 | $82,612 | $1,437,810 |
| c) | Demolition / Hazmat | $181,641 | $11,073 | $192,714 |
| d) | Other; | N/A | N/A | N/A |
| e) | Other; | N/A | N/A | N/A |
| f) | Other; | N/A | N/A | N/A |
| g) | Other; | N/A | N/A | N/A |
| h) | Other; | N/A | N/A | N/A |
| i) | Other; | N/A | N/A | N/A |
| j) | Markups on Above Adjustments (item "c") | $63,430 | $3,867 | $67,297 |
| | **SUBTOTAL** | **$1,919,139** | **$116,989** | **$2,036,128** |
| | ***TOTAL ESTIMATED COST*** | | | **$11,875,281** |
| | ***TOTAL COST ADJUSTMENTS*** | | | **$2,036,128** |
| | ***ADJUSTED ESTIMATED PROJECT COST*** | | | **$9,839,152** |
| | ***FINAL ESTIMATED COST PER SQ. FT.*** | | | **$407.54** |

*** *This sheet is not intended to represent the final total project cost. Costs contained within this sheet are selected project costs used for comparison to the Marshall Valuation Service benchmark only.*

# 3.0 FINAL SUMMARY

Project Name: Medstar Southern Maryland Hospital
Project Location: Clinton, MD
Project Description Hospital Addition / Renovation
Sheet: **MARSHALL VALUATION SERVICE ANALYSIS - Overall Summary**

RLB Rider Levett Bucknall

Date: **10/3/2013**

| 1. PROJECT COSTS | | New Construction | Renovation | Surgery |
|---|---|---|---|---|
| a) | Total Floor Area | 165,415 | 42,772 | 24,143 |
| b) | Building | $72,629,152 | $15,462,738 | $10,389,848 |
| c) | Fixed Equipment | Incl | Incl | Incl |
| d) | Site Work | $3,183,110 | N/A | N/A |
| e) | Architects Fees | $6,135,902 | $1,248,068 | $793,777 |
| f) | Permits | $288,750 | $96,250 | $58,298 |
| g) | Capitalized Construction Interest | $4,687,225 | $892,805 | $633,358 |
| | SUBTOTAL | $86,924,139 | $17,699,861 | $11,875,281 |
| h) | Cost Adjustments | $19,210,005 | $3,478,120 | $2,036,128 |
| | **TOTAL PROJECT COST** | **$67,714,135** | **$14,221,741** | **$9,839,152** |
| | ***TOTAL (COST PER SQ. FT)*** | ***$409.36*** | ***$332.50*** | ***$407.54*** |
| | **TOTAL MVS BUILDING COST** | **$57,189,925** | **$20,565,738** | **$14,744,546** |
| | ***TOTAL (COST PER SQ. FT.)*** | ***$345.74*** | ***$480.82*** | ***$610.72*** |

| | | |
|---|---|---|
| ***COMBINED PROJECT COST*** | **$81,935,876** | **$9,839,152** |
| ***COMBINED PROJECT COST PER SQ. FT.*** | ***$393.57*** | ***$407.54*** |
| ***COMBINED MVS COST*** | **$77,755,663** | **$14,744,546** |
| ***COMBINED MVS COST PER SQ. FT.*** | ***$373.49*** | ***$610.72*** |

*** *This sheet is not intended to represent the final total project cost. Costs contained within this sheet are selected project costs used for comparison to the Marshall Valuation Service benchmark only.*

## Present Value of Constructing Shell Space in (current year)

| | Current Build | | | | Future Build | | | | | |
|---|---|---|---|---|---|---|---|---|---|---|
| Description | Construction Cost Outflow | Interest Outflow | Total | Present Value | Construction Cost Outflow | Interest Outflow | Construction Remobilization Costs | Operational Costs* | Total | Present Value |
| 2014 | $ - | $ - | $ - | | $ - | $ - | $ - | $ - | $ - | |
| 2015 | $ - | $ - | $ - | | $ - | $ - | $ - | $ - | $ - | |
| 2016 | $ - | $ - | $ - | | $ - | $ - | $ - | $ - | $ - | |
| 2017 | $ 1,850,000 | $ 111,000 | $ 1,961,000 | | $ - | $ - | $ - | $ - | $ - | |
| 2018 | $ 1,850,000 | $ 222,000 | $ 2,072,000 | | $ - | $ - | $ - | $ - | $ - | |
| 2019 | $ - | $ 222,000 | $ 222,000 | | $ - | $ - | $ - | $ - | $ - | |
| 2020 | $ - | $ 222,000 | $ 222,000 | | $ 2,035,000 | $ 122,100 | $ 1,059,000 | $ 1,300,000 | $ 4,516,100 | |
| 2021 | $ - | $ 222,000 | $ 222,000 | | $ 2,035,000 | $ 244,200 | $ - | $ - | $ 2,279,200 | |
| Total | $ 3,700,000 | $ 999,000 | $ 4,699,000 | $ 4,404,689 | $ 4,070,000 | $ 366,300 | $ 1,059,000 | $ 1,300,000 | $ 6,795,300 | $ 6,163,281 |

| | |
|---|---|
| Present value savings related to curre | $ 1,758,591 |

| Inputs: | Current Build | Future Build |
|---|---|---|
| Rate at avg 5yr (see tab 2) | 1.34% | 1.34% |
| Construction Start | 7/1/2017 | 7/1/2020 |
| Construction Complete | 6/30/2018 | 6/30/2021 |
| Construction Costs | 3,700,000 | 3,700,000 |
| Interest Costs | 6% | 6% |
| Cost escalation | included | 110% |

* Operational costs include the following:

1) Shutting down half of the Nursing Observation unit for 8 weeks ($466k)
2) Intermittent disruptions to the Nursing Observation unit for an additional 3 months ($404k)
3) Fielding of increased, construction-related complaints for 6 months ($90K)
4) Intermittent disruptions to the Emergency Depart and Admin for a period of 4 months ($120k)
5) Increased workload for Facilities Staff for a period of 6 months ($90k)
6) Miscellaneous minor disruptions in other departments for a period of 6 months ($90k)

**Southern Maryland Hospital Center, Inc.**

TABLE 2: STATISTICAL PROJECTIONS - SURGERY ONLY

| | Two Most Actual Ended Recent Years | | Current Year Projected | Projected Years (ending with first full year at full utilization) | | | | | |
|---|---|---|---|---|---|---|---|---|---|
| CY or FY (Circle) | 2012 | 2013 | 2014 | 2015 | 2016 | 2017 | 2018 | 2019 | 2020 |
| **1. Admissions** | | | | | | | | | |
| a. M/S/G/A | 2,617 | 2,327 | 2,595 | 2,622 | 2,645 | 2,666 | 2,688 | 2,705 | 2,717 |
| b. Pediatric | | | | | | | | | |
| c. Obstetric | | | | | | | | | |
| d. Intensive Care | | | | | | | | | |
| e. Psychiatric | | | | | | | | | |
| f. Rehabilitation | | | | | | | | | |
| g. Chronic | | | | | | | | | |
| h. Other (Nursery) | | | | | | | | | |
| **j. TOTAL (excluding Nursery)** | **2,617** | **2,327** | **2,595** | **2,622** | **2,645** | **2,666** | **2,688** | **2,705** | **2,717** |
| **2. Patient Days** | | | | | | | | | |
| a. M/S/G/A | | | | | | | | | |
| b. Pediatric | | | | | | | | | |
| c. Obstetric | | | | | | | | | |
| d. Intensive Care | | | | | | | | | |
| e. Psychiatric | | | | | | | | | |
| f. Rehabilitation | | | | | | | | | |
| g. Chronic | | | | | | | | | |
| h. Other (Nursery) | | | | | | | | | |
| **j. TOTAL (excluding Nursery)** | - | - | - | - | - | - | - | - | - |
| **3. Average Length of Stay** | | | | | | | | | |
| a. M/S/G/A | | | | | | | | | |
| b. Pediatric | | | | | | | | | |
| c. Obstetric | | | | | | | | | |
| d. Intensive Care | | | | | | | | | |
| e. Psychiatric | | | | | | | | | |
| f. Rehabilitation | | | | | | | | | |
| g. Chronic | | | | | | | | | |
| h. Other (Nursery) | | | | | | | | | |
| **j. TOTAL (excluding Nursery)** | | | | | | | | | |
| **4. Occupancy Percentage*** | | | | | | | | | |
| a. M/S/G/A | | | | | | | | | |
| b. Pediatric | | | | | | | | | |
| c. Obstetric | | | | | | | | | |
| d. Intensive Care | | | | | | | | | |
| e. Psychiatric | | | | | | | | | |
| f. Rehabilitation | | | | | | | | | |
| g. Chronic | | | | | | | | | |
| h. Other (Nursery) | | | | | | | | | |
| **j. TOTAL (excluding nursery)** | | | | | | | | | |
| **5. Number of Licensed Beds** | | | | | | | | | |
| a. M/S/G/A | | | | | | | | | |
| b. Pediatric | | | | | | | | | |
| c. Obstetric | | | | | | | | | |
| d. Intensive Care | | | | | | | | | |
| e. Psychiatric | | | | | | | | | |
| f. Rehabilitation | | | | | | | | | |
| g. Chronic | | | | | | | | | |
| h. Other (Nursery) | | | | | | | | | |
| **j. TOTAL (excluding nursery)** | | | | | | | | | |
| **6. Outpatient Visits** | | | | | | | | | |
| a. Emergency | | | | | | | | | |
| b. Outpatient Dept. (Lab, Rad, PT, STH, OTH) | | | | | | | | | |
| c. Other (PDC, CL) | | | | | | | | | |
| d. Other (SDS) | 6,296 | 5,935 | 5,673 | 5,841 | 6,012 | 6,180 | 6,336 | 6,466 | 6,578 |
| e. Other (observation) | | | | | | | | | |
| **f. TOTAL** | **6,296** | **5,935** | **5,673** | **5,841** | **6,012** | **6,180** | **6,336** | **6,466** | **6,578** |

Note 1 : Surgery volumes are Medstar assumptions using SG2 modeling methodology.

Southern Maryland Hospital Center, Inc.

TABLE 4: REVENUES AND EXPENSES - SURGERY ONLY

| | Two Most Actual Ended Recent Years | | Current Year Projected | Projected Years (ending with first full year at full utilization) | | | | | |
|---|---|---|---|---|---|---|---|---|---|
| CY or FY (Circle) | 2012 | 2013 | 2014 | 2015 | 2016 | 2017 | 2018 | 2019 | 2020 |
| **1. Revenueab** | | | | | | | | | |
| a. Inpatient Services | $ 184,149,559 | $ 167,004,215 | $ 159,463,160 | $ 24,342,648 | $ 24,632,739 | $ 24,913,831 | $ 26,122,914 | $ 26,941,061 | $ 32,181,909 |
| b. Outpatient Services | $ 86,487,262 | $ 100,950,594 | $ 103,574,125 | $ 14,602,500 | $ 15,030,000 | $ 15,450,000 | $ 15,840,000 | $ 16,165,000 | $ 16,445,000 |
| c. Gross Patient Services | $ 270,636,821 | $ 267,954,809 | $ 263,037,285 | $ 38,945,148 | $ 39,662,739 | $ 40,363,831 | $ 41,962,914 | $ 43,106,061 | $ 48,626,909 |
| d. Allowance for Bad Debt | $ 14,841,008 | $ 15,671,754 | $ 14,345,397 | $ 2,179,370 | $ 2,219,527 | $ 2,258,760 | $ 2,348,245 | $ 2,412,215 | $ 2,721,162 |
| e. Contractual Allowance | $ 29,096,276 | $ 38,500,483 | $ 39,154,132 | $ 5,193,335 | $ 5,289,026 | $ 5,382,517 | $ 5,595,755 | $ 5,748,193 | $ 6,484,398 |
| f. Charity Care | $ 1,038,183 | $ 2,463,285 | $ 1,208,139 | $ 228,608 | $ 232,820 | $ 236,936 | $ 246,322 | $ 253,033 | $ 285,440 |
| g. Net Patient Services | $ 225,661,354 | $ 211,319,287 | $ 208,329,617 | $ 31,343,835 | $ 31,921,366 | $ 32,485,618 | $ 33,772,592 | $ 34,692,620 | $ 39,135,909 |
| h. Other Operating Revenues (cafeteria, gift shop, med records abstract, telephone) | $ 824,578 | $ 1,132,011 | $ 1,083,016 | | | | | | |
| i. Net Operating Revenue | $ 226,485,932 | $ 212,451,298 | $ 209,412,633 | $ 31,343,835 | $ 31,921,366 | $ 32,485,618 | $ 33,772,592 | $ 34,692,620 | $ 39,135,909 |
| **2. Expenseab** | | | | | | | | | |
| a. Salaries, Wages, and Professional Fees, (including fringe benefits) | $ 106,115,073 | $ 116,724,246 | $ 112,046,537 | $ 16,540,811 | $ 16,842,600 | $ 17,121,757 | $ 17,551,882 | $ 17,799,453 | $ 19,217,209 |
| b. Contractual Services | $ 19,689,858 | $ 28,235,612 | $ 13,598,414 | $ 2,009,568 | $ 2,051,916 | $ 2,087,456 | $ 2,159,384 | $ 2,213,784 | $ 2,489,406 |
| c. Interest on Current Debt | $ 1,237,744 | $ 2,412,769 | $ 8,094,955 | | | | | | |
| d. Interest on Project Debt | $ - | $ - | $ - | | | | | | |
| e. Current Depreciation | $ 5,566,726 | $ 4,599,985 | | | | | | | |
| f. Project Depreciation | $ - | $ - | $ - | | | | | | |
| g. Current Amortization | $ - | $ 1,278,012 | $ 2,019,054 | | | | | | |
| h. Project Amortization | $ - | $ - | $ - | | | | | | |
| i. Supplies | $ 42,849,230 | $ 40,409,909 | $ 37,987,810 | $ 5,618,133 | $ 5,748,117 | $ 5,850,790 | $ 6,092,012 | $ 6,293,735 | $ 7,275,212 |
| j. Other Expenses (Management fees, corporate overhead, risk) | $ 37,225,241 | $ 32,593,472 | $ 27,993,755 | $ 2,709,276 | $ 2,781,539 | $ 2,850,198 | $ 2,949,258 | $ 3,089,469 | $ 3,451,625 |
| k. Total Operating Expenses | $ 212,683,872 | $ 226,254,005 | $ 201,740,525 | $ 26,877,788 | $ 27,424,172 | $ 27,910,201 | $ 28,752,536 | $ 29,396,441 | $ 32,433,452 |
| **3. Income** | | | | | | | | | |
| a. Income from Operation | $ 13,802,060 | $ (13,802,707) | $ 7,672,108 | $ 4,466,047 | $ 4,497,194 | $ 4,575,417 | $ 5,020,056 | $ 5,296,179 | $ 6,702,457 |
| b. Non-Operating Income | $ (215,201) | $ 105,417 | $ - | $ - | $ - | $ - | $ - | $ - | $ - |
| c. Subtotal | $ 13,586,859 | $ (13,697,290) | $ 7,672,108 | $ 4,466,047 | $ 4,497,194 | $ 4,575,417 | $ 5,020,056 | $ 5,296,179 | $ 6,702,457 |
| d. Income Taxes | $ - | $ - | $ - | $ - | $ - | $ - | $ - | $ - | $ - |
| e. Net Income (Loss) | $ 13,586,859 | $ (13,697,290) | $ 7,672,108 | $ 4,466,047 | $ 4,497,194 | $ 4,575,417 | $ 5,020,056 | $ 5,296,179 | $ 6,702,457 |
| **4. Patient Mix:** | | | | | | | | | |
| **A. Percent of Total Revenue** | | | | | | | | | |
| 1) Medicare | 39.2% | 41.1% | 41.1% | 41.1% | 41.1% | 41.1% | 41.1% | 41.1% | 41.1% |
| 2) Medicaid | 17.0% | 17.0% | 17.0% | 17.0% | 17.0% | 17.0% | 17.0% | 17.0% | 17.0% |
| 3) Blue Cross | 16.4% | 15.7% | 15.7% | 15.7% | 15.7% | 15.7% | 15.7% | 15.7% | 15.7% |
| 4) Commercial Insurance | 18.0% | 18.0% | 18.0% | 18.0% | 18.0% | 18.0% | 18.0% | 18.0% | 18.0% |
| 5) Self-Pay | 5.5% | 6.1% | 6.1% | 6.1% | 6.1% | 6.1% | 6.1% | 6.1% | 6.1% |
| 6) Other (Specify) | 3.9% | 2.1% | 2.1% | 2.1% | 2.1% | 2.1% | 2.1% | 2.1% | 2.1% |
| 7) TOTAL | 100% | 100% | 100% | 100% | 100% | 100% | 100% | 100% | 100% |
| **B. Percent of Patient Days\Visits\Procedures (as applicable)** | | | | | | | | | |
| 1) Medicare | 39.2% | 39.2% | 39.2% | 39.2% | 39.2% | 39.2% | 39.2% | 41.1% | 41.1% |
| 2) Medicaid | 17.0% | 17.0% | 17.0% | 17.0% | 17.0% | 17.0% | 17.0% | 4.3% | 4.3% |
| 3) Blue Cross | 16.4% | 16.4% | 16.4% | 16.4% | 16.4% | 16.4% | 16.4% | 15.7% | 15.7% |
| 4) Commercial Insurance | 18.0% | 18.0% | 18.0% | 18.0% | 18.0% | 18.0% | 18.0% | 8.1% | 8.1% |
| 5) Self-Pay | 5.5% | 5.5% | 5.5% | 5.5% | 5.5% | 5.5% | 5.5% | 6.1% | 6.1% |
| 6) Other (Specify) | 3.9% | 3.9% | 3.9% | 3.9% | 3.9% | 3.9% | 3.9% | 24.7% | 24.7% |
| 7) TOTAL | 100% | 100% | 100% | 100% | 100% | 100% | 100% | 100% | 100% |

Note 1: Revenues based on actual volumes ('12, '13), MedStar internal budget ('14), or projections using SG2 methodology with 2014 as baseline ('15-'20).

Note 2: Expenses based on actual volumes ('12, '13), MedStar internal budget ('14), or projections using SG2 methodology with 2014 as baseline amounts ('15-'20).

a - No inflation included

b - Income/Expenses exclude physicians expense and CRNA expense as required by standard accounting practice.

c - Incremental revenue on projected volume growth is discounted by 15%

d - Variable expenses related to the incremental volume growth equal 59% of discounted revenue, which was validated with national averages. Allocation is 33% salaries, 5% contracted services, 16% supplies, and 5% other.

# MedStar Health's Population Health Management Initiatives

MedStar Health is a $4.2 billion not-for-profit regional healthcare system with 10 hospitals, 20 diversified entities, a research institute with $30 million in annual revenue, 79 accredited training programs with over 1,100 residents and fellows, 30,000 associates, 1,607 employed physicians and 5,600 affiliated physicians.

The current strategic goals for the organization are two-fold: 1) organize care in a way that better serves our patients; and 2) adapt and prepare for a changing health care delivery and financing environment.

Towards those goals, MedStar is developing and building out a *Distributed Care Delivery Network* defined as providing organized, standardized, high quality, high service to patients across the continuum where patients receive a seamless care experience around a standard set of service components wherever and whenever they receive care. The specific tactics utilized to build the Distributed Care Delivery Network include:

- Sharing best practices across MedStar Health and its individual entities;
- Improving intra-system communication;
- Integrating medical care across the continuum;
- Focusing on prevention; and
- Enhancing access to care.

Below is a description of many of the activities MedStar has embarked on over the last several years to build the Distributed Care Delivery Network. You will note several common themes surrounding these initiatives:

- Piloting innovative initiatives at one or more of its entities and, if successful, standardizing the practice across the system;
- A key focus on improving population health; and
- Reducing health care utilization and costs.

### *MedStar Health's Physician Network*

MedStar Health's network of 1,607 employed physicians is accessible across the region in a variety of settings. In addition to the many specialty physicians working inside the 10 MedStar hospitals, there are numerous MedStar practitioners specializing in primary care and specialty care located in 48 community-based offices throughout the region. These community-based offices allow patients to conveniently access the care they need close to home or work. Several of the newer community based sites are larger, multispecialty centers that bring together a variety of diagnostic and treatment services within a single location to allow patients to receive all their needed services in one location.

In addition, with six locations and growing, MedStar PromptCare provides urgent care services on a walk-in basis 12 hours per day Monday through Friday and 8 hours per day on the weekend. To ensure continuity of care, MedStar PromptCare sends a report to the patient's primary care provider within 24 hours of the visit. If the patient does not have primary care provider, MedStar PromptCare provides the patient with the names of primary care providers accepting new patients in the area.

### *MedStar Family Choice*

MedStar Family Choice has participated as an MCO in Maryland's HealthChoice program since the program's inception in 1996. Focused initially in the Baltimore region, last year the service area in Maryland was expanded to include Prince George's, Montgomery, Charles, and St. Mary's counties and became available to the residents of the District of Columbia. MedStar Family Choice has approximately 73,000 enrollees with 39,000 based in Maryland and 34,000 based in the District of Columbia. Growth is expected to continue as Medicaid enrollment expands with implementation of the Affordable Care Act and MedStar Family Choice continues its service area expansion.

In addition to providing direct patient services through its network of over 5,500 providers, MedStar Family Choice provides a vast array of health education classes and events – all intended to improve the health of the population served. It has a complex case management service for members who have complicated medical conditions (e.g., multiple chronic illnesses with high utilization, transplants, COPD members who have had at least one inpatient admission or two ER visits within six months, primarily related to this condition, catastrophic conditions/special needs requiring etc.) as well as a disease management service for members who need help managing chronic diseases (pediatric asthma, adult respiratory, adult diabetes, high risk pregnancy, HIV, pain management, substance abuse, wound care, pediatric diabetes, etc.).

MedStar Family Choice has consistently been a top rated plan in Maryland and is ranked 26th nationally among Medicaid HMOs by the National Committee for Quality Assurance for service and clinical quality..

### *MedStar Visiting Nurses Association*

MedStar Visiting Nurse Association (VNA), the largest, in-home healthcare provider in the region, provides skilled nursing, rehabilitation, personal care, and infusion therapy for homebound, disabled, and chronically ill patients. The non-profit company's clinical professionals care for more than 17,000 patient annually, making over 220,000 visits to ensure patients heal safely in their homes and avoid emergent care or hospitalization. With 650 employees, MedStar VNA reaches patients throughout Maryland, the District of Columbia and northern Virginia. To support good health in the community, MedStar VNA also offers patient-centered medical home and wellness services, including on-site vaccinations and health screenings.

The MedStar VNA has been foundational in the development of multiple MedStar post acute care initiatives to prevent readmissions and improve population health.

### *All Cause Readmission Reduction*

MedStar has been very proactive in reducing readmissions across the Maryland and Washington region. In 2011, MedStar created a system-wide initiative to standardize readmission reduction efforts. The system-wide initiative took into account logistic differences from all of the MedStar hospitals, standardized them, and incorporated them into a unified approach so that all MedStar hospitals could work as a team to help reduce readmissions.

In May 2012, a 10 point plan was implemented across the entire system. The 10 point plan consisted of the following:

1. Targeted patients would have discharge medication reconciliation and teach back done by pharmacist, RN, or MD prior to discharge. If patient had any issues with medication refills this would be addresses before patient left the hospital.
2. Targeted CHF patients would be given scales and taught how to use these and who to call in case there was a major weight fluctuation.
3. Discharge summaries on targeted patients would be faxed to PCP for post acute care follow up within 48 hours of discharge.
4. Targeted patients would have an appointment within 5 days of discharge.
5. Transitional care clinics would be created for patients who did not have a PCP or were unable to see one within 5 days.
6. Targeted patients discharged to home would have a Visiting Nurses Association follow up within 48 hours.
7. All entities would meet with local nursing homes to improve handoff and collaboration of care.
8. Targeted patients would be followed up telephonically within 48 hours of discharge.
9. Monthly reports would be generated to each hospital.
10. Each MedStar hospital would have a site specific readmissions team consisting of senior medical and nursing leadership which would meet monthly to discuss progress in readmission reduction.

After launching the system-wide plan, MedStar Health has shown a definitive and sustained trend towards lower all cause readmissions in Maryland. In addition, through this work it was learned that the three most valuable drivers for reducing readmissions from the 10-point plan are: (1) discharge medication reconciliation; 2) appointment with PCP within 5 days; and 3) home health nursing follow up within 48 hours.

***Patient Centered Medical Homes (PCMH)***

The PCMH is a model of practice in which a team of professionals, guided by a primary care provider, provide continuous, comprehensive, and coordinated care in a culturally and linguistically sensitive manner to patients throughout their lives. The PCMH provides for all of the patient's health care needs, or collaborates with other qualified professionals to meet those needs. The PCMH is a proven alternative to the costly, fragmented delivery system. And, research has confirmed that medical homes can lead to higher quality and lower costs, and can improve patient and provider experience.

MedStar was the first entity in the Maryland/ DC region to have a primary care practice with a Level III NCQA designation. Today there are 23 MedStar physician offices with NCQA Level III designation. To achieve NCQA designation, practices must demonstrate the ability to successfully provide six elements of care, including: access during expanded office hours, use of data for population management. Care management, support of a self care process, tracking of referrals and follow up, and implementation of continuous quality improvement. MedStar practices participate in the State's PCHM program as well as the CareFirst program. It is important to note that rather than relying on CareFirst case management to implement the PCMH program, MedStar practices utilize internal resources (including the VNA) for this function.

There are also 55 MedStar physicians who are certified for the NCQA Diabetes Recognition Program. The NCQA Diabetes Recognition Program was developed to provide clinicians with tools to support the delivery and recognition of consistent high quality care. The program is designed to

recognize clinicians who use evidence-based measures and provide excellent care to patients with diabetes. The program has 11 measures which cover areas such as:

- HbA1c control;
- Blood pressure control;
- LDL control;
- Eye examinations;
- Nephropathy Assessment; and
- Smoking and Tobacco Use and cessation advice or treatment.

***Post Acute Care Coordination Program***

Beginning in April 2010, MedStar Washington Hospital Center, MedStar National Rehabilitation Center and MedStar Visiting Nurses Association collaborated to pilot a post acute care coordination (PACC) program focused on total joint replacement patients. The purpose of the program was to create a proactive care coordination model that effectively progresses patients through the continuum of care, consistent with agreed upon functional and clinical criteria.

Under the program, post acute care planning begins pre-admission for total joint patients or at time of admission for other diagnostic groups. The PACC liaison works with the patient/family to develop an anticipated plan for post acute care, spanning a minimum of 30 days. The PACC liaison then facilitates discharge planning in collaboration with the patient/family, physician, and clinical team. After discharge, the PACC liaison continues care coordination, promoting smooth transitions and patient/family support.

Results from the PACC program have shown: improved patient experience, higher physician satisfaction, reduced length of stay, and improved patient outcomes with lower readmissions. The program is now being expanded to other MedStar Hospital and to other types of conditions.

***Million Hearts® Campaign***

Heart disease and stroke are the first and fourth leading causes of death in the United States. Heart disease is responsible for 1 of every 4 deaths in the country. Million Hearts® is a national public-private initiative launched by the Department of Health and Human Services and the Center for Disease Control in the fall of 2011 with the goal of preventing 1 million heart attacks and strokes by 2017. It aligns existing efforts, as well as creates new programs, to improve health across communities and help Americans live longer, more productive lives.

MedStar Health was the first health system partner in this initiative. As part of this partnership, beginning in October of 2012 MedStar imbedded a targeted set of alerts and guidance into its electronic medical record focused on the "ABCs" of cardiovascular risk reduction – **A**spirin for people at risk, **B**lood pressure screening and control, **C**holesterol screening and control, and **S**moking cessation. Of the 126,000 adult patients seen by MedStar primary care providers this calendar year – over 97% were assessed for cardiovascular risk, had evidence-based goals set, and were sent home with a personalized Million Hearts® 'ABCs Report Card' – containing specific information as to their latest ABCs status, goals, and where needed, guidance towards reaching their goals.

The chart below summarizes our progress to date.

| Intervention | National 2012 Baseline | National 2017 Target | MedStar Results October 2013 |
|---|---|---|---|
| Aspirin for those at high risk | 47% | 70% | 86% |
| Blood pressure control | 46% | 70% | 71% |
| Cholesterol control | 33% | 70% | 77% |
| Reduce Smoking Prevalence | 21% | 19% | 12.9% |

***Health Enterprise Zone – MedStar St. Mary's Hospital, Greater Lexington Park***

The HEZ Initiative is a four-year pilot program with a budget of $4 million per year focused on: 1) reducing health disparities among racial and ethnic minority populations and among geographic areas; 2) improving health care access and health outcomes in underserved communities; and 3) reducing health care costs and hospital admissions and readmissions. It was established by the Maryland Health Improvement & Health Disparities Reduction Act, signed into law in April 2012. Applications were evaluated based on a set of 13 review principles.

MedStar St. Mary's Hospital, Greater Lexington Park was one of five applicants to receive HEZ designation. The proposal for Greater Lexington Park seeks to improve public health outcomes in the Lexington Park, Great Mills, and Park Hall communities of St. Mary's County – areas experiencing a dearth of primary care providers. The initiative includes a new community health care center, and five new primary care practitioners, one psychiatrist, and two licensed social workers in the Zone. Innovative strategies include the development of a "health care transportation route" to address barriers to care in this rural area of the states.

***End of Life Care***

In 2008, MedStar Union Memorial Hospital's palliative medicine team increased their scope by developing a collaborative approach with the ICU medical team. The palliative medicine team adopted a dual strategy for increasing integration: 1) regular participation of a palliative medicine specialist on ICU rounds; and 2) use of a screening tool to identify patients who were most likely to benefit from palliative care consultation. After the integration, palliative medicine consultation increased significantly and ICU length of stay was significantly shorter for patients who received the consultation (7 versus 10 days).

MedStar Union Memorial Hospital's palliative medicine team also developed and evaluated the impact of a new standardized palliative care order set (PCOS). Patients who received the PCOS were compared to patients receiving no palliative care orders, and those with an order for comfort measures only (CMO). This project showed that those with PCOS had a significant improvement in the availability of comfort medications and less use of non-comfort based interventions. In the PCOS group, availability of palliative medications was significantly higher in almost all medication categories compared with the CMO group and the no palliative care orders group. The findings

supported previous successful PCOS implementation at large hospital settings and showed a palliative care order set can be effectively implemented in a community hospital where staffing and time for palliative care education may be more limited. It also showed the CMO orders alone were insufficient for redirecting changes in care at end-of-life.

More recently, MedStar received a Verizon Foundation grant to support funding for palliative care providers to connect via tablet device following hospital discharge to continue establishing goals of care and symptom management for patients with heart and lung failure. The palliative medicine team at MedStar Union Memorial has also applied for participation in the MHCC Hospital Pilot Palliative Program Study.

***Medical House Calls Program***

Since 1999, MedStar Washington Hospital Center has operated a Medical House Calls program. The Medical House Calls program, staffed by an interdisciplinary team of geriatricians, nurse practitioners, and social workers, provides primary health care and social services to homebound frail elders. The goal is to identify and treat potential medical and social problems early to avoid the need for costly hospital or emergency care. Program participants are assigned a primary Medical House Calls geriatrician who performs a comprehensive initial visit and subsequently visits the patient at least every four months. Nurse practitioners make interim follow up visits at least monthly and provide urgent care visits on weekdays. During each house call, the clinician evaluates the patient for changes in cognitive and functional status and monitors all chronic illnesses. Social workers offer in-home counseling and care giver support, coordination of resources for meals, home health care and respite care coordination of financial assistance, and case management.

In twelve years the team has cared for over 2,400 elder and has resulted in reduced costs, shorter and less intense lengths of stay for patients who require hospitalization, and a greater percentage of patients who die at home rather than a hospital. The program is one of 18 programs selected to participate in the CMS Independence at Home demonstration designed to test a service delivery and payment incentive model that use home-based primary care teams to improve the health outcomes and reduce expenditures for Medicare beneficiaries with multiple chronic conditions.

***ACC Patient Navigator Program***

Nearly one in five patients hospitalized with heart attack and one in four patients hospitalized with heart failure are readmitted within 30 days of discharge. The American College of Cardiology, with a $10 million sponsorship from AstraZeneca, has developed Patient Navigator Program aimed at improving patient outcomes by engaging a dedicated team of patient navigators focused on supporting patients with acute coronary syndrome and heart failure during their hospital stay and in the weeks following discharge. In October, 2013 MedStar Washington Hospital Center was selected to be one of the first 35 hospitals be part of the program.

The program will test patient centered solutions that will attend to patients' functional disabilities, stressors, and other issues that increase the risk of readmission. Unlike other similar programs, this initiative will use registry data and apply the best practices learned from two established ACC programs – the NCDR ACTION Registry and the Hospital to Home Initiative.

***Bedside RX Delivery Program***

The BedSide RX Delivery Program was initiated in three of MedStar's Maryland hospitals in June of this year. The purpose of the program is to remove barriers to access to needed pharmaceuticals and improving patient understanding of medications. It requires the collaboration of many team members -- case managers to assess co-pay availability and issue voucher if needed; prescribers to review home medication list and determine of refills are needs and write prescription at least two hours before discharge; getting patient authorization to use MedStar pharmacy; storing the prescription until patient ready to leave; and the pharmacy to fill, determine and collect co-pay, and deliver to the unit.

# MEDSTAR HEALTH, INC.

Consolidated Financial Statements

June 30, 2013 and 2012

(With Independent Auditors' Report Thereon)

**MEDSTAR HEALTH, INC.**

**Table of Contents**


| | Page |
|---|---|
| Independent Auditors' Report | 1 |
| Consolidated Financial Statements: | |
| Consolidated Balance Sheets | 3 |
| Consolidated Statements of Operations and Changes in Net Assets | 5 |
| Consolidated Statements of Cash Flows | 7 |
| Notes to Consolidated Financial Statements | 8 |

KPMG LLP
1 East Pratt Street
Baltimore, MD 21202-1128

# Independent Auditors' Report

The Board of Directors
MedStar Health, Inc.:

We have audited the accompanying consolidated financial statements of MedStar Health, Inc. (the Corporation), which comprise the consolidated balance sheets as of June 30, 2013 and 2012, and the related consolidated statements of operations and changes in net assets and cash flows for the years then ended and the related notes to the consolidated financial statements.

## Management's Responsibility for the Financial Statements

Management is responsible for the preparation and fair presentation of these consolidated financial statements in accordance with U.S. generally accepted accounting principles; this responsibility includes the design, implementation, and maintenance of internal control relevant to the preparation and fair presentation of consolidated financial statements that are free from material misstatement, whether due to fraud or error.

## Auditors' Responsibility

Our responsibility is to express an opinion on these consolidated financial statements based on our audits. We conducted our audits in accordance with auditing standards generally accepted in the United States of America. Those standards require that we plan and perform the audit to obtain reasonable assurance about whether the consolidated financial statements are free from material misstatement.

An audit involves performing procedures to obtain audit evidence about the amounts and disclosures in the consolidated financial statements. The procedures selected depend on the auditors' judgment, including the assessment of the risks of material misstatement of the consolidated financial statements, whether due to fraud or error. In making those risk assessments, the auditor considers internal control relevant to the entity's preparation and fair presentation of the consolidated financial statements in order to design audit procedures that are appropriate in the circumstances, but not for the purpose of expressing an opinion on the effectiveness of the entity's internal control. Accordingly, we express no such opinion. An audit also includes evaluating the appropriateness of accounting policies used and the reasonableness of significant accounting estimates made by management, as well as evaluating the overall presentation of the consolidated financial statements.

We believe that the audit evidence we have obtained is sufficient and appropriate to provide a basis for our audit opinion.

## Opinion

In our opinion, the consolidated financial statements referred to above present fairly in all material respects, the financial position of MedStar Health, Inc. as of June 30, 2013 and 2012, and the results of their operations and their cash flows for the years then ended in accordance with U.S. generally accepted accounting principles.

KPMG LLP is a Delaware limited liability partnership, the U.S. member firm of KPMG International Cooperative ("KPMG International"), a Swiss entity.

**Emphasis of Matter**

As discussed in note 1(y) to the consolidated financial statements, the Corporation adopted the provisions of Financial Accounting Standards Update No. 2011-07, *Health Care Entities (Topic 954): Presentation and Disclosure of Patient Service Revenue, Provision for Bad Debts, and Allowance for Doubtful Accounts for Certain Health Care Entities*. Our opinion is not modified with respect to this matter.

KPMG LLP

October 4, 2013

**MEDSTAR HEALTH, INC.**

Consolidated Balance Sheets

June 30, 2013 and 2012

(Dollars in millions)

| Assets | | 2013 | 2012 |
|---|---|---|---|
| Current assets: | | | |
| Cash and cash equivalents | $ | 445.4 | 568.6 |
| Investments | | 61.6 | 19.0 |
| Assets whose use is limited or restricted | | 64.7 | 63.4 |
| Receivables: | | | |
| From patient services (less allowances for uncollectible accounts of $204.3 in 2013 and $189.7 in 2012) | | 546.3 | 540.7 |
| Other | | 51.2 | 49.1 |
| | | 597.5 | 589.8 |
| Inventories | | 57.0 | 48.5 |
| Prepaids and other current assets | | 38.4 | 30.5 |
| Total current assets | | 1,264.6 | 1,319.8 |
| Investments | | 733.6 | 612.3 |
| Assets whose use is limited or restricted | | 483.9 | 376.1 |
| Property and equipment, net | | 1,137.1 | 1,037.6 |
| Interest in net assets of foundation | | 54.8 | 48.5 |
| Goodwill and other intangible assets, net | | 202.0 | 24.6 |
| Other assets | | 135.8 | 125.9 |
| Total assets | $ | 4,011.8 | 3,544.8 |



(Continued)

**MEDSTAR HEALTH, INC.**

Consolidated Balance Sheets

June 30, 2013 and 2012

(Dollars in millions)

| Liabilities and Net Assets | | 2013 | 2012 |
|---|---|---|---|
| Current liabilities: | | | |
| Accounts payable and accrued expenses | $ | 357.4 | 323.5 |
| Accrued salaries, benefits, and payroll taxes | | 281.5 | 253.3 |
| Amounts due to third-party payors, net | | 66.7 | 61.1 |
| Current portion of long-term debt | | 61.2 | 18.5 |
| Current portion of self insurance liabilities | | 87.5 | 79.5 |
| Other current liabilities | | 87.3 | 100.8 |
| Total current liabilities | | 941.6 | 836.7 |
| Long-term debt, net of current portion | | 1,207.2 | 1,010.1 |
| Self insurance liabilities, net of current portion | | 253.2 | 228.2 |
| Pension liabilities | | 304.9 | 470.3 |
| Other long-term liabilities, net of current portion | | 140.0 | 146.0 |
| Total liabilities | | 2,846.9 | 2,691.3 |
| Net assets: | | | |
| Unrestricted net assets: | | | |
| MedStar Health, Inc. | | 1,017.4 | 726.9 |
| Noncontrolling interests | | 9.4 | 8.7 |
| Total unrestricted net assets | | 1,026.8 | 735.6 |
| Temporarily restricted | | 99.0 | 80.5 |
| Permanently restricted | | 39.1 | 37.4 |
| Total net assets | | 1,164.9 | 853.5 |
| Total liabilities and net assets | $ | 4,011.8 | 3,544.8 |

See accompanying notes to consolidated financial statements.

**MEDSTAR HEALTH, INC.**

Consolidated Statements of Operations and Changes in Net Assets

Years ended June 30, 2013 and 2012

(Dollars in millions)

| | 2013 | 2012 |
|---|---|---|
| Operating revenues: | | |
| Net patient service revenue: | | |
| Hospital inpatient services | $ 2,240.8 | 2,145.2 |
| Hospital outpatient services | 1,444.1 | 1,343.3 |
| Physician services | 290.5 | 257.2 |
| Other patient service revenue | 124.5 | 123.9 |
| Total net patient service revenue | 4,099.9 | 3,869.6 |
| Provision for bad debts | 214.5 | 191.3 |
| Total net patient service revenue, net of provision for bad debts | 3,885.4 | 3,678.3 |
| Premium revenue | 138.2 | 116.3 |
| Other operating revenue | 193.6 | 190.0 |
| Net operating revenues | 4,217.2 | 3,984.6 |
| Operating expenses: | | |
| Personnel | 2,310.7 | 2,152.0 |
| Supplies | 658.9 | 629.7 |
| Purchased services | 562.1 | 514.4 |
| Other operating | 393.9 | 384.3 |
| Interest expense | 45.7 | 45.4 |
| Depreciation and amortization | 167.1 | 156.5 |
| Total operating expenses | 4,138.4 | 3,882.3 |
| Earnings from operations | 78.8 | 102.3 |
| Nonoperating gains (losses): | | |
| Investment income | 15.5 | 14.6 |
| Net realized gains (losses) on investments | 24.9 | (9.7) |
| Unrealized gain (loss) on derivative instrument | 6.7 | (7.8) |
| Unrealized gains (losses) on trading investments | 43.9 | (13.1) |
| Change in equity interest in alternative investments | 20.1 | (15.4) |
| Income tax benefit | 1.9 | 3.6 |
| Other nonoperating losses | (6.1) | (4.6) |
| Total nonoperating gains (losses) | 106.9 | (32.4) |
| Excess of revenues over expenses | $ 185.7 | 69.9 |



(Continued)

**MEDSTAR HEALTH, INC.**

Consolidated Statements of Operations and Changes in Net Assets

Years ended June 30, 2013 and 2012

(Dollars in millions)

| | | 2013 | 2012 |
|---|---|---|---|
| Unrestricted net assets: | | | |
| Excess of revenues over expenses | $ | 185.7 | 69.9 |
| Change in funded status of defined benefit plans | | 106.9 | (250.8) |
| Distributions to noncontrolling interests | | (6.3) | (3.3) |
| Net assets released from restrictions used for purchase of property and equipment and other | | 4.9 | 7.6 |
| Increase (decrease) in unrestricted net assets | | 291.2 | (176.6) |
| Temporarily restricted net assets: | | | |
| Contributions | | 17.4 | 10.8 |
| Realized net gains on restricted investments | | 4.7 | 2.2 |
| Change in unrealized gains (losses) on restricted investments | | 6.2 | (2.6) |
| Net assets released from restrictions | | (9.8) | (15.3) |
| Increase (decrease) in temporarily restricted net assets | | 18.5 | (4.9) |
| Permanently restricted net assets: | | | |
| Contributions and other | | 1.5 | (0.3) |
| Realized net gains on marketable restricted investments | | 0.1 | 0.1 |
| Change in unrealized gains (losses) on restricted investments | | 0.1 | (0.1) |
| Increase (decrease) in permanently restricted net assets | | 1.7 | (0.3) |
| Increase (decrease) in net assets | | 311.4 | (181.8) |
| Net assets, beginning of year | | 853.5 | 1,035.3 |
| Net assets, end of year | $ | 1,164.9 | 853.5 |

See accompanying notes to consolidated financial statements.

**MEDSTAR HEALTH, INC.**

Consolidated Statements of Cash Flows

Years ended June 30, 2013 and 2012

(Dollars in millions)

| | | 2013 | 2012 |
|---|---|---|---|
| Cash flows from operating activities: | | | |
| Change in net assets | $ | 311.4 | (181.8) |
| Adjustments to reconcile change in net assets to net cash provided by operating activities: | | | |
| Depreciation and amortization | | 167.1 | 156.5 |
| Amortization of bond financing costs, premiums and discounts | | (0.3) | 0.1 |
| (Gain) loss on sale of property and equipment | | (0.1) | 0.1 |
| Change in funded status of defined benefit plans | | (106.9) | 250.8 |
| Realized net (gains) losses on marketable investments | | (29.7) | 7.4 |
| Change in unrealized (gains) losses of marketable investments | | (50.2) | 15.8 |
| Change in value of equity interest in alternative investments | | (20.1) | 15.4 |
| Unrealized (gain) loss on derivative instrument | | (6.7) | 7.8 |
| Net settlement payment on derivative instrument | | 3.9 | 4.1 |
| Loss on extinguishment of debt | | 2.5 | 2.7 |
| Distributions to noncontrolling interests | | 6.3 | 3.3 |
| Deferred income tax benefit | | (1.8) | (4.3) |
| Provision for bad debts | | 214.5 | 191.3 |
| Temporarily and permanently restricted contributions | | (18.9) | (10.5) |
| Changes in operating assets and liabilities: | | | |
| Receivables | | (188.5) | (206.9) |
| Inventories and other assets | | (44.6) | 0.5 |
| Accounts payable and accrued expenses | | 50.2 | 59.7 |
| Amounts due to third-party payors | | (4.9) | 15.7 |
| Other liabilities | | (45.5) | (19.0) |
| Net cash provided by operations | | 237.7 | 308.7 |
| Cash flows from investing activities: | | | |
| Purchases of investments and assets whose use is limited or restricted, net | | (179.3) | (59.7) |
| Net settlement payment on derivative instrument | | (3.9) | (4.1) |
| Purchases of property and equipment and acquisition of Southern Maryland Hospital Center and other | | (427.1) | (164.8) |
| Net cash used in investing activities | | (610.3) | (228.6) |
| Cash flows from financing activities: | | | |
| Proceeds from long-term borrowings | | 498.9 | 136.6 |
| Repayments of long-term borrowings | | (18.5) | (17.1) |
| Repayments of refinanced bonds and other borrowings | | (240.6) | (135.4) |
| Payment of deferred issuance costs | | (3.0) | (1.4) |
| Temporarily and permanently restricted contributions and other | | 18.9 | 10.5 |
| Distributions to noncontrolling interests | | (6.3) | (3.3) |
| Net cash provided by (used in) financing activities | | 249.4 | (10.1) |
| (Decrease) increase in cash and cash equivalents | | (123.2) | 70.0 |
| Cash and cash equivalents at beginning of year | | 568.6 | 498.6 |
| Cash and cash equivalents at end of year | $ | 445.4 | 568.6 |
| Supplemental disclosure of cash flow information: | | | |
| Interest paid | $ | 44.8 | 44.8 |
| Noncash investing and financing activities: | | | |
| Accounts payable for fixed asset purchases | $ | 19.2 | 5.7 |

See accompanying notes to consolidated financial statements.

## (1) Description of Organization and Summary of Significant Accounting Policies

### *(a) Organization*

MedStar Health, Inc. (MedStar or the Corporation) is a tax-exempt, Maryland membership corporation which, through its controlled entities and other affiliates, provides and manages healthcare services in the region encompassing Maryland, Washington D.C. and Northern Virginia. The Corporation became operational on June 30, 1998 by the transfer of the membership interests of Helix Health, Inc. (Helix – a not-for-profit Maryland Corporation) and Medlantic Healthcare Group, Inc. (Medlantic – a not-for-profit Delaware Corporation) in exchange for the guarantee of the debt of both Helix and Medlantic by the Corporation. The trade names of the principal tax-exempt and taxable entities of the Corporation are:

**Tax-Exempt**

- MedStar Ambulatory Services (formerly known as Bay Development Corporation)
- MedStar Franklin Square Medical Center
- MedStar Georgetown University Hospital
- MedStar Good Samaritan Hospital
- MedStar Harbor Hospital
- MedStar Health Research Institute
- MedStar Health Visiting Nurse Association, Inc.
- MedStar Montgomery Medical Center
- MedStar National Rehabilitation Network
- MedStar Southern Maryland Hospital Center
- MedStar St. Mary's Hospital
- MedStar Surgery Center, Inc.
- MedStar Union Memorial Hospital
- MedStar Washington Hospital Center
- Church Home and Hospital of the City of Baltimore, Inc.
- HH MedStar Health, Inc.

**Taxable**

- Greenspring Financial Insurance, LTD.
- MedStar Enterprises, Inc. and Subsidiaries
- MedStar Physician Partners, Inc.
- Parkway Ventures, Inc. and Subsidiaries

### *(b) Acquisition of Southern Maryland Hospital, Inc.*

On December 10, 2012, the Corporation and Southern Maryland Hospital, Inc. (the Hospital) closed on an asset purchase agreement, whereby the Corporation purchased substantially all of the assets and assumed certain obligations of the Hospital. As a result of the transaction, the Corporation recognized approximately $80.0 of property, plant and equipment, approximately $150.0 of goodwill and other intangible assets, and working capital amounts. In December 2012, the Corporation entered into a $180.0 bridge loan, that was replaced by permanent financing in May 2013 (see note 6), and used the proceeds to fund the acquisition. The Hospital is a 263-bed acute care hospital located in Clinton, Maryland in Prince George's County. The consolidated financial statements include the operations of the Hospital since the closing date. The net operating revenues and total operating expenses of the Hospital are less than 3% of consolidated operating revenues and expenses for the year ended June 30, 2013, which are not considered significant to the Corporation's operations for the year ended June 30, 2013.

Due to significant changes in the legal, organizational and reporting structure of the Hospital subsequent to the purchase, the Corporation has determined that the presentation of supplemental pro forma results for the years ended June 30, 2013 and 2012 is impracticable. In addition, the asset purchase agreement provides for certain adjustments to the purchase price and net working capital calculations. As such, the amounts currently recorded in the consolidated financial statements are considered provisional and subject to final measurement period adjustments in future reporting periods.

### *(c) Basis of Presentation*

The consolidated financial statements are prepared on the accrual basis of accounting in accordance with U.S. generally accepted accounting principles (U.S. GAAP). All majority owned and direct member entities are consolidated. All entities where the Corporation exercises significant influence but for which it does not have control are accounted for under the equity method. All other entities are accounted for under the cost method. All significant intercompany accounts and transactions have been eliminated.

### *(d) Use of Estimates*

The preparation of financial statements in conformity with U.S. GAAP requires management to make estimates and assumptions that affect the reported amounts of assets and liabilities and disclosure of contingent assets and liabilities at the date of the financial statements and the reported amounts of revenues and expenses during the reporting period. Actual results could differ from those estimates.

### *(e) Cash Equivalents*

All highly liquid investments with a maturity date of three months or less when purchased are considered to be cash equivalents.

### *(f) Investments and Assets whose use is Limited or Restricted*

The Corporation's investment portfolio is considered trading and is classified as current or noncurrent assets based on management's intention as to use. All debt and equity securities are reported at fair value principally based on quoted market prices on the consolidated balance sheets.

The Corporation has investments which under U.S. GAAP are considered alternative investments, including commingled equity funds totaling $103.3 and $67.5 as of June 30, 2013 and 2012, respectively; inflation hedging equity, commodity, and fixed income funds totaling $62.6 and $57.0 as of June 30, 2013 and 2012, respectively, and hedge fund of funds and private equity totaling $176.5 and $137.0 as of June 30, 2013 and 2012, respectively. These funds utilize various types of debt and equity securities and derivative instruments in their investment strategies. Alternative investments are recorded under the equity method and the change in equity interest is included in nonoperating gains (losses) on the consolidated statements of operations and changes in net assets.

Investments in unconsolidated affiliates are accounted for under the cost or equity method of accounting, as appropriate, and are included in other assets in the consolidated balance sheets. The Corporation utilizes the equity method of accounting for its investments in entities over which it exercises significant influence. The Corporation's equity income or loss is recognized in other operating revenue on the consolidated statements of operations and changes in net assets.

Investments and assets whose use is limited or restricted include assets held by trustees under bond indenture, self-insurance trust arrangements, assets restricted by donor, and assets designated by the Board of Directors for future capital improvements and other purposes over which it retains control and may, at its discretion, use for other purposes. Amounts from these funds required to meet current liabilities have been classified in the consolidated balance sheets as current assets. Purchases and sales of securities are recorded on a trade-date basis.

Investment income (interest and dividends) and realized gains and losses on investment sales are reported as nonoperating gains (losses) in the excess of revenues over expenses in the accompanying consolidated statements of operations and changes in net assets unless the income or loss is restricted by the donor or law. Investment income on funds held in trust for self-insurance purposes is included in other operating revenue. Investment income and net gains (losses) that are restricted by the donor are recorded as a component of changes in temporarily or permanently restricted net assets, in accordance with donor imposed restrictions. Realized gains and losses are determined based on the specific security's original purchase price or adjusted cost if the investment was previously determined to be other-than-temporarily impaired. Unrealized gains and losses are included in nonoperating gains (losses) within the excess of revenue over expenses.

### *(g) Inventories*

Inventories, which primarily consist of medical supplies and pharmaceuticals at many of the operating entities, are stated at the lower of cost or market, with cost being determined primarily under the average cost or first-in, first-out methods.

### *(h) Property and Equipment*

Property and equipment acquisitions are recorded at cost and are depreciated or amortized over the estimated useful lives of the assets. Estimated useful lives range from three to forty years. Amortization of assets held under capital leases are computed using the shorter of the lease term or the estimated useful life of the leased asset and is included in depreciation and amortization expense. Interest cost incurred on borrowed funds during the period of construction of capital assets is capitalized as a component of the cost of acquiring those assets. Depreciation is computed on a straight-line basis. Major classes and estimated useful lives of property and equipment are as follows:

| | |
|---|---|
| Leasehold improvements | Lease term |
| Buildings and improvements | 10 – 40 years |
| Equipment | 3 – 20 years |

Gifts of long-lived assets such as land, buildings, or equipment are reported as unrestricted support, and are excluded from the excess of revenues over expenses, unless explicit donor stipulations specify how the donated assets must be used. Gifts of long-lived assets with explicit restrictions that specify how the assets are to be used and gifts of cash or other assets that must be used to acquire long-lived assets are reported as restricted support. Absent explicit donor stipulations about how long those long-lived assets must be maintained, expirations of donor restrictions are reported when the donated or acquired long-lived assets are placed in service.

Management routinely evaluates the carrying value of its long-lived assets for impairment. No impairment charges were recorded against the carrying value of the Corporation's long-lived assets during the periods ended June 30, 2013 and 2012.

### *(i) Interest in Net Assets of Foundation*

The Corporation recognizes its rights to assets held by a recipient organization, which accepts cash or other financial assets from a donor and agrees to use those assets on behalf of or transfer those assets, the return on investment of those assets, or both, to the Corporation. Changes in the Corporation's economic interests in the financially interrelated organization are recognized in the consolidated statements of operations and changes in net assets as a component of changes in temporarily restricted net assets.

### *(j) Goodwill and Other Intangible Assets*

Goodwill is an asset representing the future economic benefits arising from other assets acquired in a business combination that are not individually identified and separately recognized. As of June 30, 2013 and 2012, the Corporation had one reporting unit, which included all subsidiaries of the Corporation and held goodwill, net on its balance sheet of $163.8 and $21.2, respectively. The increase from the prior year is primarily a result of the Corporation's acquisition of Southern Maryland Hospital discussed in section *(b)* above. Goodwill is evaluated for impairment annually using a qualitative assessment to determine whether there are events or circumstances that indicate it

is more likely than not that the reporting unit's fair value is less than its carrying amount. Based on this qualitative assessment, the Corporation determined that there was no goodwill impairment for the years ended June 30, 2013 and 2012.

Other intangible assets recorded at fair value and amortized over their estimated useful lives. Other intangible assets were $41.9 and $4.9 as of June 30, 2013 and 2012, respectively, and related accumulated amortization was $3.7 and $1.5, respectively. The Corporation recognized amortization expense of $2.0 and $1.0 for the years ended June 30, 2013 and 2012, respectively, related to identifiable intangible assets.

***(k) Internal-Use Software***

The Corporation capitalizes the direct costs, including internal personnel costs, associated with the implementation of new information systems for internal use. The Corporation capitalized $4.6 and $6.3 during the years ended June 30, 2013 and 2012, respectively. Capitalized amounts are amortized over the estimated lives of the software, which is generally three to five years.

***(l) Financing Costs***

Financing costs incurred in issuing bonds have been capitalized and are included in other assets on the consolidated balance sheets. These costs are being amortized over the estimated duration of the related debt using the effective interest method. Accumulated amortization totaled $4.7 and $4.5 as of June 30, 2013 and 2012, respectively.

***(m) Estimated Professional Liability Costs***

The provision for estimated self-insured professional liability claims includes estimates of the ultimate costs for both reported claims and claims incurred but not reported. These estimates are based on actuarial analysis of historical trends, claims asserted and reported incidents. The receivables related to such claims are recorded at their net realizable value.

***(n) Leases***

Lease arrangements, including assets under construction, are capitalized when such leases convey substantially all the risks and benefits incidental to ownership. Capital leases are amortized over either the lease term or the life of the related assets, depending upon available purchase options and lease renewal features. Amortization related to capital leases is included in the consolidated statements of operations and changes in net assets within depreciation and amortization expense.

***(o) Derivative***

The Corporation utilizes a derivative financial instrument to manage its interest rate risks associated with tax-exempt debt. The Corporation does not hold or issue derivative financial instruments for trading purposes. The derivative instrument is recorded on the consolidated balance sheets at its fair value. The Corporation's current derivative investment does not qualify for hedge accounting; therefore, the changes in fair value have been recognized in the accompanying consolidated statements of operations and changes in net assets as mark-to-market adjustments in nonoperating

gains (losses). The fair market value of the derivative instrument is included in other long-term liabilities in the accompanying consolidated balance sheets.

### *(p) Net Patient Service Revenue and Net Patient Accounts Receivable*

Net patient service revenue is reported at the estimated net realizable amounts from patients, third-party payors, and others for services rendered, including estimated retroactive adjustments due to future audits, reviews and investigations. The differences between the estimated and actual amounts are recorded as part of net patient service revenue in future periods as the amounts become known, or as years are no longer subject to audit, review or investigation. Payment arrangements include prospectively determined rates per discharge, fee-for-service, discounted charges, and per diem payments. Hospital inpatient services, hospital outpatient services, the physician component of physician/managed care networks, and other patient service revenues are recognized when the services are rendered based on billable charges. Other patient service revenue primarily consists of home care, long-term care and other nonhospital patient services.

The Corporation's policy is to write-off all patient receivables which are identified as uncollectible. Patient accounts receivable are reduced by an allowance for uncollectible accounts to reserve for accounts which are expected to become uncollectible in future years. In evaluating the collectability of accounts receivable, the Corporation analyzes historical collections and write-offs and identifies trends for each of its major payor sources of revenue and amounts due from patients to estimate the appropriate allowance for uncollectible accounts and provision for bad debts.

Premium revenue consists of amounts received from the State of Maryland and the District of Columbia by the Corporation's managed care organization for providing medical services to subscribing participants, regardless of services actually performed. The managed care organization provides services primarily to enrolled Medicaid beneficiaries. This revenue is recognized ratably over the contractual period for the provision of services. Medical expenses of the managed care organization include a provision for incurred but unreported claims.

### *(q) Charity Care*

The Corporation provides care to patients who meet certain criteria under its charity care policies without charge or at amounts less than established rates. Because the Corporation does not pursue collection of amounts determined to qualify as charity care, they are not reported as revenue.

### *(r) Grants*

Federal grants are accounted for as either an exchange transaction or as a contribution based on terms and conditions of the grant. If the grant is accounted for as an exchange transaction, revenue is recognized as other operating revenue when earned. If the grant is accounted for as a contribution, the revenues are recognized as either other operating revenue, or as temporarily restricted contributions depending on the restrictions within the grant.

### *(s) Contributions*

Unconditional promises to give cash and other assets to the Corporation are reported at fair value at the date the promise is received. Conditional promises to give and indications of intentions to give are reported at fair value at the date the gift is received. The gifts are reported as either temporarily or permanently restricted support if they are received with donor stipulations that limit the use of the donated assets. When a donor restriction expires, that is, when a stipulated time restriction ends or purpose restriction is accomplished, temporarily restricted net assets are reclassified as unrestricted net assets and reported in the consolidated statements of operations and changes in net assets as net assets released from restrictions in other operating revenue. Donor-restricted contributions whose restrictions are met within the same year as received are reported as unrestricted net assets and reported within other operating revenue in the accompanying consolidated financial statements.

### *(t) Meaningful Use Incentives*

Under certain provisions of the American Recovery and Reinvestment Act of 2009 (ARRA), federal incentive payments are available to hospitals, physicians and certain other professionals (Providers) when they adopt, implement or upgrade certified electronic health record (EHR) technology or become "meaningful users," as defined under ARRA, of EHR technology in ways that demonstrate improved quality, safety and effectiveness of care. Incentive payments will be paid out over varying transitional schedules depending on the type of incentive (Medicare and Medicaid) and recipient (hospital or eligible provider). Eligible hospitals can attest for both Medicare and Medicaid incentives, while physicians must select to attest for either Medicare or Medicaid incentives. For Medicare incentives, eligible hospitals receive payments over four years while eligible physicians receive payments over five years. For Medicaid incentives, eligible hospitals receive payments based on the relevant State adopted payment structure and physicians receive payments over six years.

The Corporation recognizes EHR incentives when it is reasonably assured that the Corporation will successfully demonstrate compliance with the meaningful use criteria. During the years ended June 30, 2013 and 2012, certain hospitals and physicians satisfied the meaningful use criteria. As a result, the Corporation recognized $16.6 and $6.6 of EHR incentives during fiscal year 2013 and 2012, respectively, in other operating revenue.

### *(u) Excess of Revenues over Expenses*

The consolidated statements of operations and changes in net assets include a performance indicator, which is the excess of revenues over expenses. Changes in unrestricted net assets that are excluded from excess of revenues over expenses, include contributions of long-lived assets (including assets acquired using contributions that by donor restriction were to be used for the purpose of acquiring such assets), contributions from and distributions to noncontrolling interests, and defined benefit obligations in excess of recognized pension cost, among others.

### *(v) Income Taxes*

Income taxes are accounted for under the asset and liability method. Deferred tax assets and liabilities are recognized for the future tax consequences attributable to differences between the

financial statement carrying amounts of existing assets and liabilities and their respective tax bases and operating loss and tax credit carryforwards. Deferred tax assets and liabilities are measured using enacted tax rates expected to apply to taxable income in the years in which those temporary differences are expected to be recovered or settled. The effect on deferred tax assets and liabilities of a change in tax rates is recognized in the period that includes the enactment date. Any changes to the valuation allowance on the deferred tax asset are reflected in the year of the change. The Corporation accounts for uncertain tax positions in accordance with the Financial Accounting Standards Board (FASB) Accounting Standards Codification (ASC) Topic 740, *Income Taxes*.

### *(w) Temporarily and Permanently Restricted Net Assets*

Temporarily restricted net assets are those whose use by the Corporation or individual operating units has been limited by donors to a specific time period or purpose. Permanently restricted net assets have been restricted by donors to be maintained by the Corporation or individual operating units in perpetuity.

### *(x) Fair Value of Financial Instruments*

The following methods and assumptions were used to estimate the fair value of financial instruments:

*Cash and cash equivalents, receivables, other current assets, other assets, current liabilities and long-term liabilities*: The carrying amount reported in the consolidated balance sheets for each of these assets and liabilities approximates their fair value.

The fair value of investments, assets whose use is limited or restricted and the interest rate swap is discussed in note 3. The fair value of long term debt is discussed in note 6.

### *(y) New Accounting Pronouncements*

In July 2011, FASB issued ASU No. 2011-07, *Health Care Entities (Topic 954), Presentation and Disclosure of Patient Service Revenue, Provision for Bad Debts, and the Allowance for Doubtful Accounts for Certain Health Care Entities* (ASU 2011-07), which requires certain healthcare entities to change the presentation of their statement of operations by reclassifying the provision for bad debts associated with patient service revenue from an operating expense to a deduction from patient service revenue (net of contractual allowances and discounts). Additionally, enhanced disclosures about an entity's policies for recognizing revenue, assessing bad debts, as well as qualitative and quantitative information about changes in the allowance for doubtful accounts are required. These disclosures are included in note 8 to the consolidated financial statements. The provision for bad debts of $191.3 for the year ended June 30, 2012 has been reclassified as a component of net patient service revenue, net of provision for bad debts on the consolidated statement of operations and changes in net assets to conform with ASU 2011-07.

In September 2011, FASB issued ASU 2011-08, *Intangibles – Goodwill and Other (Topic 350), Testing Goodwill for Impairment* (ASU 2011-08), which permits an entity to first assess qualitative factors to determine whether it is more likely than not that the fair value of a reporting unit is less

than its carrying amount as a basis for determining whether it is necessary to perform the two-step goodwill impairment test described in Topic 350. The more likely than not threshold is defined as having a likelihood of more than 50%. The Corporation adopted this ASU effective July 1, 2012 which is described in note 1(j).

***(z) Reclassifications***

Certain prior year amounts have been reclassified to conform with current period presentation, the effect of which is not material.

## (2) Investments and Assets Whose Use Is Limited or Restricted

Investments and assets whose use is limited or restricted as of June 30, 2013 and 2012, at fair value or under the equity method of accounting in the case of alternative investments, consist of the following:

| | | 2013 | 2012 |
|---|---|---|---|
| Collateralized guaranteed investment contract and cash | $ | 98.5 | 89.4 |
| Fixed income securities and funds | | 393.1 | 336.4 |
| Equity securities | | 509.8 | 383.5 |
| Alternative investments: | | | |
| Commingled equity funds | | 103.3 | 67.5 |
| Inflation hedging equity, commodity, fixed income fund | | 62.6 | 57.0 |
| Hedge fund of funds and private equity | | 176.5 | 137.0 |
| Total investments and assets whose use is limited or restricted | | 1,343.8 | 1,070.8 |
| Less short-term investments and assets whose use is limited or restricted | | (126.3) | (82.4) |
| Long-term investments and assets whose use is limited or restricted | $ | 1,217.5 | 988.4 |

Assets whose use is limited or restricted as of June 30, 2013 and 2012, included in the table above, consist of the following:

| | | 2013 | 2012 |
|---|---|---|---|
| Funds held by trustees | $ | 71.1 | 13.0 |
| Self-insurance funds | | 216.8 | 186.1 |
| Funds restricted by donors for specific purposes and endowment | | 69.7 | 62.2 |
| Funds designated by Board and management | | 191.0 | 178.2 |
| | | 548.6 | 439.5 |
| Less assets required for current obligations | | (64.7) | (63.4) |
| | $ | 483.9 | 376.1 |

Investment income and realized and unrealized gains (losses) for assets whose use is limited, cash equivalents and investments are comprised of the following for the years ended June 30, 2013 and 2012:

| | | 2013 | 2012 |
|---|---|---|---|
| Other operating revenue: | | | |
| Investment income | $ | 4.9 | 3.8 |
| Nonoperating gains (losses): | | | |
| Investment income | | 15.5 | 14.6 |
| Net realized gains (losses) on investments | | 24.9 | (9.7) |
| Unrealized gains (losses) on trading investments | | 43.9 | (13.1) |
| Change in equity interest in alternative investments | | 20.1 | (15.4) |
| | | 104.4 | (23.6) |
| Other changes in net assets: | | | |
| Realized net gains on temporarily and permanently restricted net assets | | 4.8 | 2.3 |
| Change in unrealized gains (losses) on temporarily and permanently restricted net assets | | 6.3 | (2.7) |
| Total investment return | $ | 120.4 | (20.2) |

## (3) Fair Value of Financial Instruments

The Corporation follows the guidance within FASB ASC Topic 820, *Fair Value Measurement (ASC 820)*, which defines fair value and establishes methods used to measure fair value. The fair value hierarchy gives the highest priority to unadjusted quoted prices in active markets for identical assets or liabilities (Level 1) and the lowest priority to unobservable inputs (Level 3). A financial instrument's categorization within the

valuation hierarchy is based upon the lowest level of input that is significant to the fair value measurement. The three levels of the fair value hierarchy under ASC 820 are described below:

- Level 1 – Quoted prices in active markets for identical assets or liabilities at the measurement date;
- Level 2 – Observable inputs other than quoted prices for the asset, either directly or indirectly observable, that reflect assumptions market participants would use to price the asset based on market data obtained from sources independent of the Corporation.
- Level 3 – Unobservable inputs that reflect the Corporations own assumptions about the assumptions market participants would use to price an asset based on the best information available in the circumstances.

The Corporation has incorporated an Investment Policy Statement (IPS) into the investment program. The IPS, which has been formally adopted by the Corporation's Board of Directors, contains numerous standards designed to ensure adequate diversification by asset class and geography. The IPS also limits all investments by manager and position size, and limits fixed income position size based on credit ratings, which serves to further mitigate the risks associated with the investment program. At June 30, 2013 and 2012, management believes that all investments were being managed in a manner consistent with the IPS.

The table below presents the Corporation's investable assets and liabilities as of June 30, 2013, aggregated by the three level valuation hierarchy:

| | | Level 1 | Level 2 | Level 3 | Total |
|---|---|---|---|---|---|
| Assets: | | | | | |
| Cash and cash equivalents | $ | 543.9 | — | — | 543.9 |
| U.S. treasury bonds | | 60.6 | — | — | 60.6 |
| U.S. agency mortgage backed securities | | 124.2 | — | — | 124.2 |
| Corporate bonds | | — | 90.7 | — | 90.7 |
| Fixed income mutual funds | | 0.7 | 78.2 | — | 78.9 |
| All other fixed income securities | | 4.8 | 33.9 | — | 38.7 |
| Equity mutual funds & ETF's | | 101.8 | — | — | 101.8 |
| Common stocks | | 408.0 | — | — | 408.0 |
| Total assets | $ | 1,244.0 | 202.8 | — | 1,446.8 |
| Liabilities: | | | | | |
| Interest rate swap | $ | — | 16.4 | — | 16.4 |
| Total liabilities | $ | — | 16.4 | — | 16.4 |

The table below presents the Corporation's investable assets and liabilities as of June 30, 2012, aggregated by the three level valuation hierarchy:

| | | Level 1 | Level 2 | Level 3 | Total |
|---|---|---|---|---|---|
| Assets: | | | | | |
| Cash and cash equivalents | $ | 658.0 | — | — | 658.0 |
| U.S. treasury bonds | | 48.6 | — | — | 48.6 |
| U.S. agency mortgage backed securities | | 85.9 | — | — | 85.9 |
| Corporate bonds | | — | 84.1 | — | 84.1 |
| Fixed income mutual funds | | 1.3 | 79.3 | — | 80.6 |
| All other fixed income securities | | 3.8 | 33.4 | — | 37.2 |
| Equity mutual funds & ETF's | | 68.2 | — | — | 68.2 |
| Common stocks | | 315.3 | — | — | 315.3 |
| Total assets | $ | 1,181.1 | 196.8 | — | 1,377.9 |
| Liabilities: | | | | | |
| Interest rate swap | $ | — | 23.2 | — | 23.2 |
| Total liabilities | $ | — | 23.2 | — | 23.2 |

See note 1(f) for information on investments of the Corporation, which are treated under the equity method and not reported above.

For the years ended June 30, 2013 and 2012, there were no significant transfers into or out of Levels 1, 2 or 3.

## (4) Property and Equipment

Property and equipment as of June 30, 2013 and 2012 is as follows:

| | | 2013 | 2012 |
|---|---|---|---|
| Land | $ | 70.4 | 59.6 |
| Buildings and improvements | | 1,249.4 | 1,167.2 |
| Equipment | | 1,646.3 | 1,505.7 |
| | | 2,966.1 | 2,732.5 |
| Less accumulated depreciation and amortization | | (1,914.1) | (1,784.6) |
| | | 1,052.0 | 947.9 |
| Construction-in-progress | | 85.1 | 89.7 |
| | $ | 1,137.1 | 1,037.6 |



(Continued)

Construction-in-progress includes a variety of ongoing capital projects at the Corporation as of June 30, 2013 and 2012. Depreciation and amortization expense related to property and equipment amounted to $165.1 and $155.5 for the years ended June 30, 2013 and 2012, respectively.

## (5) Other Assets

Other assets as of June 30, 2013 and 2012 consist of the following:

| | | 2013 | 2012 |
|---|---|---|---|
| Deferred financing costs, net | $ | 13.8 | 12.5 |
| Investments in unconsolidated entities | | 15.0 | 15.7 |
| Reinsurance receivables | | 44.6 | 40.3 |
| Deferred tax asset | | 28.4 | 26.1 |
| Other assets | | 34.0 | 31.3 |
| | $ | 135.8 | 125.9 |

The Corporation has investments in other healthcare related organizations that are accounted for under the equity method which total $15.0 and $15.7 at June 30, 2013 and 2012, respectively. Under the equity method, original investments are recorded at cost and adjusted by the Corporation's share of the undistributed earnings or losses of these organizations. The related ownership interest in these organizations ranges from 8% to 50%. The Corporation's share of earnings in these organizations was $4.2 and $4.1 for the years ended June 30, 2013 and 2012, respectively, and are recognized in other operating revenue in the consolidated statements of operations and changes in net assets. Certain other nonconsolidated entities are recorded under the cost method.

## (6) Debt

As of June 30, 2013 and 2012, the Corporation's outstanding borrowings include the following:

| | 2013 | 2012 |
|---|---|---|
| Maryland Health and Higher Educational Facilities Authority Revenue Bonds: | | |
| 4.25% – 5.25% Serial bonds (Series 1998A, due 2008 – 2012) | $ — | 4.5 |
| 4.75% Term bonds (Series 1998A, due 2028) | — | 30.7 |
| 5.25% Term bonds (Series 1998A, due 2038) | 82.0 | 82.1 |
| 4.75% Term bonds (Series 1998B, due 2028) | — | 20.9 |
| 5.25% Term bonds (Series 1998B, due 2038) | 57.0 | 57.0 |
| 4.25% – 5.75% Serial bonds (Series 2004, due 2009 – 2025) | 25.8 | 29.7 |
| 5.375% Term bonds (Series 2004, due 2024) | 49.7 | 49.7 |
| 5.50% Term bonds (Series 2004, due 2033) | 80.1 | 80.1 |
| 4.75% Term bonds (Series 2007, due 2042) | 56.0 | 56.0 |
| 5.25% Term bonds (Series 2007, due 2046) | 89.0 | 89.0 |
| 2.00% – 5.00% Serial bonds (Series 2011, due 2012 – 2023) | 51.8 | 53.9 |
| 5.00% Term bonds (Series 2011, due 2031) | 5.6 | 5.6 |
| 5.00% Term bonds (Series 2011, due 2041) | 35.4 | 35.4 |
| 2.19% Direct Purchase (Series 2012, due 2017 – 2022) | 38.6 | 38.6 |
| 3.00% – 5.00% Serial bonds (Series 2013A, due 2016 – 2028) | 60.9 | — |
| 5.00% Term bonds (Series 2013A, due 2038) | 17.3 | — |
| 5.00% Term bonds (Series 2013A, due 2041) | 25.0 | — |
| 4.00% Term bonds (Series 2013A, due 2041) | 14.6 | — |
| 3.00% – 5.00% Serial bonds (Series 2013B, due 2025 – 2033) | 60.8 | — |
| 4.00% Term bonds (Series 2013B, due 2038) | 45.0 | — |
| 5.00% Term bonds (Series 2013B, due 2038) | 44.0 | — |
| Plus unamortized net premium | 30.0 | 9.3 |
| | 868.6 | 642.5 |

| | | 2013 | 2012 |
|---|---|---|---|
| District of Columbia Hospital Revenue Bonds: | | | |
| Multimodal Revenue bonds: | | | |
| 0.04% – 0.12% at June 30, 2013 Serial bonds (Series 1998A due 2008-2038) (and 0.14% – 0.21% at June 30, 2012) | $ | 128.9 | 131.7 |
| 2.75% – 5.00% Serial bonds (Series 1998B, due 2008 – 2019) | | 11.0 | 12.3 |
| 5.00% Term bonds (Series 1998B, due 2028) | | 20.2 | 20.2 |
| 5.00% Term bonds (Series 1998B, due 2038) | | 33.9 | 33.9 |
| 2.75% – 5.00% Serial bonds (Series 1998C, due 2008 – 2019) | | 11.0 | 12.3 |
| 5.50% Term bonds (Series 1998C, due 2028) | | 20.1 | 20.1 |
| 5.00% Term bonds (Series 1998C, due 2038) | | 34.0 | 34.0 |
| Less unamortized net discount | | (1.2) | (1.2) |
| | | 257.9 | 263.3 |
| Other: | | | |
| Notes payable to financial institutions or state agencies under mortgages (floating rates ranging between 0.9% – 6.0%) and other | | 12.1 | 15.0 |
| Line of credit due August 2016 (0.25% – 0.90% at June 30, 2013 and 0.25% – 0.95% at June 30, 2012) | | 129.8 | 107.8 |
| | | 141.9 | 122.8 |
| Total debt | | 1,268.4 | 1,028.6 |
| Less current portion of long-term debt | | (61.2) | (18.5) |
| Long-term debt, net | $ | 1,207.2 | 1,010.1 |

Scheduled maturities on borrowings, for the next five fiscal years and thereafter are as follows:

| | | |
|---|---|---|
| 2014 | $ | 61.2 |
| 2015 | | 18.6 |
| 2016 | | 19.1 |
| 2017 | | 151.0 |
| 2018 | | 22.2 |
| Thereafter | | 967.5 |
| Total | $ | 1,239.6 |

The fair value of outstanding tax exempt bonds is estimated to be $1,122.4 and $965.2 as of June 30, 2013 and 2012, respectively. The fair value of other long-term debt approximates its carrying value.

In December 1998, the Maryland Health and Higher Education Facilities Authority (MHHEFA) and the District of Columbia (District) issued bonds (Series 1998 Bonds) on behalf of the Corporation. Bond proceeds of approximately $588.6 were loaned to the Corporation under separate loan agreements with MHHEFA and the District upon execution of obligations pursuant to the Master Trust Indenture. The District issued $300.0 of Multimodal Revenue Bonds, including $150.0 Series 1998A ($24.1 repaid through August 2013), $75.0 Series 1998B ($11.3 repaid through August 2013), and $75.0 Series 1998C ($11.2 repaid through August 2013).

The District Series 1998A bonds, which consist of three tranches totaling $125.9 at August 2013, trade as uninsured Variable Rate Demand Obligations backed by bank letters of credit. The Series 1998A Tranche I bonds which remained outstanding in August 2013 consisted of approximately $42.0 bonds trading in a daily mode backed by a letter of credit issued by Wells Fargo Bank, National Association (formerly Wachovia Bank, National Association) and remarketed by J.P. Morgan Securities Inc. The letter of credit expires in May 2014. In the event of a failed remarketing, the Tranche I bonds would be tendered to the bank and repaid over a four-year period, beginning 367 days following the date of the failed remarketing. The Series 1998A Tranche II bonds totaled $42.0 in August 2013. These bonds trade in a weekly mode and are remarketed by Citigroup Global Markets Inc. The letter of credit backing these bonds was issued by JPMorgan Chase Bank, N.A. and expires in May 2015. In the event of a failed remarketing, the Tranche II bonds would be tendered to the bank and repaid over a four-year period, beginning 367 days following the failed remarketing. The Series 1998A Tranche III bonds totaled $42.0 in August 2013. These bonds trade in a weekly mode and are remarketed by Citigroup Global Markets Inc. The letter of credit backing these bonds was issued by PNC Bank, National Association. The term of the letter of credit is five years, and expires in May 2017. In the event of a failed remarketing, the Tranche III bonds would be tendered to the bank and repaid over a four-year period, beginning 367 days following the failed remarketing. No portion of the Series 1998A bonds has been put at June 30, 2013 and 2012, respectively. The $63.7 Series 1998B and $63.8 Series 1998C bonds (as of August 2013) are at a fixed rate, insured by Assured Guaranty, Ltd. (Assured; formerly Financial Security Assurance, Inc.). The reimbursement obligation with respect to the letters of credit are evidenced and secured by obligations issued by the Corporation under the Master Trust Indenture.

MHHEFA issued $283.5 of Revenue Bonds, including the $166.6 Series 1998A ($82.0 outstanding after August 2013) and $116.9 Series 1998B ($57.0 outstanding after August 2013). All Series 1998 MHHEFA bonds were issued at fixed rates. Principal and interest under the Series 1998 MHHEFA bonds are insured under municipal insurance policies with Assured and Ambac. Of the Series 1998 MHHEFA bonds, $51.7 was refinanced in March 2013 in conjunction with the MHHEFA Series 2013A financing described below.

Related to the District borrowings, the Corporation entered into an interest rate swap with Wells Fargo Bank, National Association in a notional amount totaling $150.0 (reduced to $103.4 at August 2013). The swap agreement expires in fiscal year 2027. The interest rate swap is part of a comprehensive and long-term capital structure strategy. The purpose of the swap is to mitigate the effect of potential interest rate volatility and minimize the variability of the Corporation's average cost of capital. Under the terms of the swap, the Corporation pays a fixed rate and receives a variable rate. Collateral is only required to be posted under the swap in the event that the Corporation's credit ratings are downgraded by two rating agencies below the BBB – or Baa2 – level. To date, no collateral postings have been required. As of

June 30, 2013 and 2012, the variable interest rate under these agreements was 0.13% and 0.16%, respectively. The fixed rate was 3.69% as of June 30, 2013 and 2012. The variable rates are capped at 14.0%. The change in fair value of the swap is reported in nonoperating gains (losses) in the statements of operations and changes in net assets.

In February 2004, MHHEFA issued $170.3 in bonds (Series 2004 Bonds) on behalf of the Corporation. The proceeds of the Series 2004 Bonds were loaned to the Corporation pursuant to a loan agreement with MHHEFA upon execution of an obligation pursuant to the Master Trust Indenture. The Series 2004 Bonds were issued as $40.5 serial bonds maturing 2009 through 2025 ($18.9 repaid through August 2013), $49.7 term bonds maturing 2024, and $80.1 term bonds maturing 2033. Such bonds were issued at fixed rates. Series 2004 Bonds maturing on or after August 2015 are subject to redemption or purchase at the option of the Corporation prior to maturity beginning in 2014.

In January 2007, MHHEFA issued $145.0 in bonds (Series 2007 Bonds) on behalf of the Corporation. The Series 2007 Bonds were issued at a premium, resulting in total proceeds of $148.6. The proceeds of the Series 2007 Bonds were loaned to the Corporation pursuant to a loan agreement with MHHEFA upon execution of an obligation pursuant to the Master Trust Indenture. The Series 2007 Bonds were issued as $56.0 term bonds maturing 2042 and $89.0 term bonds maturing 2046. Such bonds were issued at fixed rates. Series 2007 Bonds maturing on or after May 2042 are subject to redemption or purchase at the option of the Corporation prior to maturity beginning in 2016.

In November 2011, MHHEFA issued $94.9 in bonds (Series 2011 Bonds) on behalf of the Corporation. The proceeds of the Series 2011 Bonds were loaned to the Corporation pursuant to a loan agreement with MHHEFA upon execution of an obligation pursuant to the Master Trust Indenture. The Series 2011 Bonds were issued as $53.9 serial bonds maturing 2012 through 2023 ($9.2 repaid through August 2013), $5.6 term bonds maturing 2031, and $35.4 term bonds maturing 2041. The Series 2011 Bonds maturing on or after August 2022 are subject to redemption or purchase at the option of the Corporation prior to maturity beginning in 2021. The Series 2011 Bonds were issued at fixed rates. The proceeds from the transaction were used to refund $20.2 of the Series 1998 A&B bonds, to refund debt outstanding on the Corporation's Revolving Credit Facility, and to refund certain debt associated with MedStar St. Mary's Hospital.

In June 2012, the Corporation entered into a $38.6 MHHEFA Direct Purchase financing transaction with JP Morgan Chase Bank, N.A. (the Series 2012 Bond). The proceeds from the transaction were used to redeem certain outstanding MHHEFA Series 1998A bonds that were due to mature in 2018 as well as a portion of the outstanding MHHEFA Series 1998 A&B bonds due to mature in 2028. The repayment of the Series 2012 Bond is evidenced by an obligation issued under the Master Trust Indenture. The term of the Series 2012 Bond is ten years and the repayment terms approximate the previous repayment terms of the Series 1998 bonds that were refunded. Covenants, conditions, and security for the Series 2012 Bond is similar to the revolving credit agreement.

In March 2013, MHHEFA issued $117.8 in bonds (Series 2013A Bonds) on behalf of the Corporation. The Series 2013A Bonds were issued at a premium, resulting in total proceeds of $128.7. The proceeds of the Series 2013A Bonds were loaned to the Corporation pursuant to a loan agreement with MHHEFA upon execution of an obligation pursuant to the Master Trust Indenture. The Series 2013A Bonds were issued as $60.9 serial bonds maturing 2016 through 2028, $17.3 term bonds maturing 2038, $25.0 term bonds due

2041, and $14.6 term bonds maturing 2041. The Series 2013A Bonds maturing on or after August 2024 are subject to redemption or purchase at the option of the Corporation prior to maturity beginning in 2023. The Series 2013A Bonds were issued at fixed rates. The proceeds from the transaction were used to refund $51.7 of the Series 1998 A&B bonds, to fund various capital projects and capitalized interest on those projects.

In May 2013, MHHEFA issued $149.8 in bonds (Series 2013B Bonds) on behalf of the Corporation. The Series 2013B Bonds were issued at a premium, resulting in total proceeds of $159.4. The proceeds of the Series 2013B Bonds were loaned to the Corporation pursuant to a loan agreement with MHHEFA upon execution of an obligation pursuant to the Master Trust Indenture. The Series 2013B Bonds were issued as $60.8 serial bonds maturing 2025 through 2033, $45.0 term bonds maturing 2038, and $44.0 term bonds maturing 2038. The Series 2013B Bonds maturing on or after August 2024 are subject to redemption or purchase at the option of the Corporation prior to maturity beginning in 2023. The Series 2013B Bonds were issued at fixed rates. The proceeds from the transaction were used to refinance a portion of the bridge loan put in place when MedStar acquired the assets of Southern Maryland Hospital Center in December 2012.

The Corporation, which is currently the sole member of an "obligated group" as defined in the Master Trust Indenture, is bound by the provisions of the Master Trust Indenture for payment of any outstanding obligations under existing loan agreements. All of the hospitals and certain other affiliates (the guarantors) of the Corporation are parties to a guaranty agreement pursuant to which they jointly and severally guaranty the payment and performance of the obligations under the Master Trust Indenture. The obligations of the guarantors under the Guaranty Agreement are collateralized by deeds of trust granted by the hospitals. Under the Master Trust Indenture and the deeds of trust, as collateral for the payments due thereunder, the Corporation and its hospital affiliates, have granted a security interest in their revenues subject to permitted encumbrances.

Under the Master Trust Indenture, the Corporation is required to maintain, among other covenants, a maximum annual debt service coverage ratio of not less than 1.10. Under the loan agreements relating to the Series 1998 Bonds, the Corporation is required to maintain a historical debt service coverage ratio of not less than 2.0 and to maintain at least 65 days cash on hand. In the event the Corporation does not meet either of these requirements, it is required to fund a trustee-held debt service reserve fund securing the Series 1998 Bonds. The amount to be deposited shall equal the lesser of: 10% of the principal amount of such outstanding bonds, or the largest annual debt service with respect to such bonds in any future year, or 125% of the average annual debt service of future years. As of June 30, 2013 and 2012, there were no funds required to be held in the debt service reserve fund for the Series 1998 Bonds.

The Corporation maintains a $250.0 revolving credit agreement provided by a group of banks. The facility was renewed in August 2013, and now has a three-year term expiring in August 2016. The facility is evidenced by an obligation issued under the Master Trust Indenture. The outstanding balance on the facility was $129.8 at June 30, 2013 and $107.8 at June 30, 2012. As of June 30, 2013 and 2012, the outstanding balance being held in operating cash in order to maximize the Corporation's liquidity was $47.8. The facility includes certain covenants, including a requirement to maintain Days Cash on Hand of 70 days, measured semi-annually at each June 30 and December 31, and a Debt Service Coverage ratio of

1.25, measured quarterly on a rolling four quarters basis. In addition, the Corporation is required to maintain a minimum credit rating of Baa2 from Moody's Investor's Service, and BBB from Standard & Poor's and Fitch Ratings. In addition, the Corporation maintains a $30.0 letter of credit facility, provided by a single lender, which is also evidenced by an obligation issued under the Master Trust Indenture. This facility is principally used to securitize certain regulatory obligations under various insurance programs, and has terms and conditions similar to the revolving credit agreement. The facility was renewed in August 2013 and now has a three-year term expiring in August 2016. However, the standby letters of credit issued under the facility can be canceled at the bank's option each year. As of June 30, 2013 and 2012, standby letters of credit issued pursuant to the facility were $18.2 and $18.0, respectively. No amounts have been drawn by the beneficiaries under the standby letters of credit.

## (7) Retirement Plans

The Corporation has two qualified defined benefit pension plans (MedStar Health, Inc. Pension Equity Plan (PEP) and MedStar Health, Inc. Cash Balance Retirement Plan (CBRP)) covering substantially all full-time employees hired before 2005. MedStar St. Mary's Hospital also has a defined benefit plan that substantially covers all employees of MedStar St. Mary's Hospital.

Benefits under the plans are substantially based on years of service and the employees' career earnings. The Corporation contributes to the plans based on actuarially determined amounts necessary to provide assets sufficient to meet benefits to be paid to plan participants and to meet the minimum funding requirements of the Employee Retirement Income Security Act of 1974, as amended by the Pension Protection Act of 2006, and Internal Revenue Service regulations. Effective July 1, 2000, employees of the Transferred Businesses (note 17) became participants in one of the Corporation's pension plans and are reflected in the pension information provided below.

The Corporation's investment policies are established by the MedStar Health, Inc.'s Investment Committee, which is comprised of members of the board of directors, other community leaders, and management. Among its responsibilities, the Investment Committee is charged with establishing and reviewing asset allocation strategies, monitoring investment manager performance, and making decisions to retain and terminate investment managers. Assets of each of the Corporation's pension plans are managed in a similar fashion by the same group of investment managers. The Corporation has incorporated an Investment Policy Statement (IPS) into the investment program. The IPS, which has been formally adopted by the Corporation's board of directors, contains numerous standards designed to ensure adequate diversification by asset class and geography. The IPS also limits all investments by manager and position size, and limits fixed income position size based on credit ratings, which serves to further mitigate the risks associated with the investment program. As of June 30, 2013 and 2012, management believes that all investments were being managed in a manner consistent with the IPS.

The Investment Committee has adopted certain target ranges for various asset classes within the pension portfolio. As of June 30, 2013 these targets included the investment of approximately 48% of the portfolio in publicly traded equities, 18% in fixed income securities, 23% in hedge funds and private equity, 10% in inflation hedging strategies (including real estate), and 1% in cash. As of June 30, 2012 these targets included the investment of approximately 49% of the portfolio in publicly traded equities, 25% in fixed income securities, 15% in hedge funds and private equity, 10% in inflation hedging strategies (including

real estate), and 1% in cash. Actual asset allocations fluctuate depending upon gains and losses within asset classes over periods of time, the timing of plan contributions and distributions, and rebalancing decisions. Due to these fluctuations, actual asset allocations could exceed these levels over certain periods in time.

The following table illustrates the actual allocations as of June 30:

| | **Actual allocation June 30, 2013** | **Actual allocation June 30, 2012** |
|---|---|---|
| Publicly traded equities – domestic | 34% | 29% |
| Publicly traded equities – international | 12 | 11 |
| Fixed income securities | 21 | 24 |
| Alternative investments: | | |
| Commingled equity funds | 9 | 7 |
| Inflation hedging equity, commodity, fixed income fund | 5 | 6 |
| Hedge funds | 13 | 11 |
| Private equities | 2 | 2 |
| Cash | 4 | 10 |
| Total | 100% | 100% |

The table below presents the Corporation's pension plans' investable assets as of June 30, 2013 aggregated by the three level valuation hierarchy:

| | Level 1 | Level 2 | Level 3 | Total |
|---|---|---|---|---|
| Assets: | | | | |
| Cash and cash equivalents | $ 36.2 | — | — | 36.2 |
| U.S. Treasury bonds | 34.3 | — | — | 34.3 |
| U.S. agency mortgage backed securities | 31.5 | — | — | 31.5 |
| Corporate bonds | — | 43.8 | — | 43.8 |
| Fixed income mutual funds | — | 60.1 | — | 60.1 |
| All other fixed income securities | 0.6 | 16.4 | — | 17.0 |
| Equity mutual funds and ETF's | 80.5 | — | — | 80.5 |
| Common stocks | 326.1 | — | — | 326.1 |
| Alternative investments: | | | | |
| Commingled equity funds | — | 75.2 | — | 75.2 |
| Inflation hedging equity, commodity, fixed income fund | — | 47.9 | — | 47.9 |
| Private equity | — | — | 17.0 | 17.0 |
| Hedge funds | — | — | 111.4 | 111.4 |
| Total assets | $ 509.2 | 243.4 | 128.4 | 881.0 |

The table below presents the Corporation's pension plans' investable assets as of June 30, 2012 aggregated by the three level valuation hierarchy:

| | Level 1 | Level 2 | Level 3 | Total |
|---|---|---|---|---|
| Assets: | | | | |
| Cash and cash equivalents | $ 77.7 | — | — | 77.7 |
| U.S. Treasury bonds | 37.4 | — | — | 37.4 |
| U.S. agency mortgage backed securities | 31.8 | — | — | 31.8 |
| Corporate bonds | — | 41.0 | — | 41.0 |
| Fixed income mutual funds | — | 61.5 | — | 61.5 |
| All other fixed income securities | 0.1 | 16.8 | — | 16.9 |
| Equity mutual funds and ETF's | 56.6 | — | — | 56.6 |
| Common stocks | 254.0 | — | — | 254.0 |
| Alternative investments: | | | | |
| Commingled equity funds | — | 50.4 | — | 50.4 |
| Inflation hedging equity, commodity, fixed income fund | — | 47.0 | — | 47.0 |
| Private equity | — | — | 17.1 | 17.1 |
| Hedge funds | — | — | 82.4 | 82.4 |
| Total assets | $ 457.6 | 216.7 | 99.5 | 773.8 |

For the years ended June 30, 2013 and 2012, there were no significant transfers between Levels 1, 2 or 3.

Changes to the fair values based on the Level 3 inputs are summarized as follows:

| | | Private equity | Hedge funds | Total |
|---|---|---|---|---|
| Balance as of June 30, 2011 | $ | 15.1 | 61.1 | 76.2 |
| Additions: | | | | |
| Contributions/purchases | | 1.8 | 23.4 | 25.2 |
| Disbursements: | | | | |
| Withdrawals/sales | | (2.6) | (0.4) | (3.0) |
| Net change in value | | 2.8 | (1.7) | 1.1 |
| Balance as of June 30, 2012 | | 17.1 | 82.4 | 99.5 |
| Additions: | | | | |
| Contributions/purchases | | 0.9 | 20.2 | 21.1 |
| Disbursements: | | | | |
| Withdrawals/sales | | (2.6) | (0.3) | (2.9) |
| Net change in value | | 1.6 | 9.1 | 10.7 |
| Balance as of June 30, 2013 | $ | 17.0 | 111.4 | 128.4 |

The following summarizes redemption terms for the hedge fund-of-funds vehicles held as of June 30, 2013:

| | Fund 1 | Fund 2 | Fund 3 |
|---|---|---|---|
| Redemption timing: | | | |
| Redemption frequency | Quarterly | Quarterly | Quarterly |
| Required notice | 70 Days | 90 Days | 65 Days |
| Audit reserve: | | | |
| Percentage held back for audit reserve | 10% | 10% | 10% |
| Gates: | | | |
| Potential gate holdback | — | — | — |
| Potential gate release timeframe | N/A | N/A | N/A |

Investments in hedge fund-of-funds are typically carried at estimated fair value. Fair value is based on the Net Asset Value (NAV) of the shares in each investment company or partnership. Such investment companies or partnerships mark-to-market or mark-to-fair value the underlying assets and liabilities in accordance with U.S. GAAP. Realized and unrealized gains and losses of the investment companies and partnerships are included in their respective operations in the current year. Changes in unrealized gains or losses on investments, including those for which partial liquidations were effected in the course of the year, are calculated as the difference between the NAV of the investment at year-end less the NAV of the investment at the beginning of the year, as adjusted for contributions and redemptions made during the year and certain lock-up provisions. Generally, no dividends or other distributions are paid.

The following summarizes the status of contributions to the private equity fund-of-funds vehicles held as of June 30, 2013:

| | | Total commitment | Percentage of commitment contributed | Percentage of commitment remaining |
|---|---|---|---|---|
| Fund 1 | $ | 9.0 | 90.7% | 9.3% |
| Fund 2 | | 8.5 | 93.8 | 6.2 |
| Fund 3 | | 8.5 | 73.5 | 26.5 |
| Total | $ | 26.0 | | |

Investments in limited partnership interests are carried at fair value as determined by the General Partner in the absence of readily ascertainable market values. The fair value of limited partnership interests is generally based on fair value capital balances reported by the underlying partnerships, subject to management review and adjustment. Security values of companies traded on exchanges, or quoted on NASDAQ, are based upon the last reported sales price on the valuation date. Security values of companies traded over the counter, but not quoted on NASDAQ, and securities for which no sale occurred on the valuation date are based upon the last quoted bid price. The value of any security for which a market quotation is not readily available may be its cost, provided however, that the General Partner adjusts such cost value to reflect any bona fide third party transactions in such a security between knowledgeable investors, of which the General Partner has knowledge. In the absence of any such third party transactions, the General Partner may use other information to develop a good faith determination of value. Examples include, but are not limited to, discounted cash flow models, absolute value models, and price multiple models. Inputs for these models may include, but are not limited to, financial statement information, discount rates, and salvage value assumptions.

The valuation of both marketable and nonmarketable securities may include discounts to reflect a lack of liquidity or extraordinary risks, which may be associated with the investment. Determination of fair value is performed on a quarterly basis by the General Partner. Because of the inherent uncertainty of valuation, the determined values may differ significantly from the values that would have been used had a ready market for those investments existed.

The Corporation has established a long-term investment return target of 8.00% and 8.25% for both PEP and CBRP in 2013 and 2012, respectively. These assumptions are based on historical returns achieved in the investment portfolios over the last ten years and represent the return that can reasonably be expected to be generated on a similarly structured portfolio in the future.

The Corporation recognizes the funded status of defined benefit pension plans in the consolidated balance sheets and the recognition in unrestricted net assets of unrecognized gains or losses, prior service costs or credits and transition assets or obligations. The funded status is measured as the difference between the fair value of the plan's assets and the projected benefit obligation of the plan. The measurement date for the plans is June 30.

In November 2011, the collective bargaining agreement for the Service Employees International Union (SEIU) Local 722 was reached and communicated to employees. As part of the new agreement, the SEIU employees' pension benefit accruals were frozen as of December 31, 2011. As such, the CBRP was remeasured at November 30, 2011, the month in which the agreement was finalized and communicated. As a result of the remeasurement, the Corporation recognized a $39.7 reduction in net assets, which is included in the change in funded status of defined benefit plans in the consolidated statements of operations and changes in net assets.

By letter dated March 12, 2012, the IRS notified the Corporation that it has selected the retirement plans for a routine examination. The examination covers the plan year ended December 31, 2010.

The following are deferred pension costs which have not yet been recognized in periodic pension expense but instead are accrued in unrestricted net assets, as of June 30, 2013 and 2012. Unrecognized actuarial losses represent unexpected changes in the projected benefit obligation and plan assets over time, primarily due to changes in assumed discount rates and investment experience. Unrecognized prior service cost is the impact of changes in plan benefits applied retrospectively to employee service previously rendered. Deferred pension costs are amortized into annual pension expense over the expected future lifetime for active employees with frozen benefits.

| | Amounts in unrestricted net assets to be recognized during the next fiscal year | Amounts recognized in unrestricted net assets as of June 30, 2013 | Amounts recognized in unrestricted net assets as of June 30, 2012 |
|---|---|---|---|
| Net actuarial loss | $ 14.2 | 547.2 | 654.2 |

The following table sets forth the plans' funded status and amounts recognized in the accompanying consolidated financial statements as of June 30, 2013 and 2012:

| | | 2013 | 2012 |
|---|---|---|---|
| Change in benefit obligation: | | | |
| Benefit obligation at beginning of year | $ | 1,244.1 | 1,039.7 |
| Service cost | | — | 1.4 |
| Interest cost | | 55.9 | 58.7 |
| Participants contributions | | — | 0.2 |
| Actuarial (gain) loss | | (74.2) | 184.9 |
| Benefits paid | | (42.8) | (40.1) |
| Curtailments | | — | (0.9) |
| Settlements | | — | 0.2 |
| Benefit obligation at end of year | | 1,183.0 | 1,244.1 |
| Change in plan assets: | | | |
| Plan assets at fair value at beginning of year | | 773.8 | 725.8 |
| Actual return on plan assets | | 81.4 | (22.2) |
| Company contributions | | 68.6 | 110.1 |
| Plan participants' contributions | | — | 0.2 |
| Benefits paid | | (42.8) | (40.1) |
| Plan assets at fair value at end of year | | 881.0 | 773.8 |
| Funded status/net amount recognized | $ | (302.0) | (470.3) |

The amounts recognized in the consolidated financial statements consist of the following as of June 30:

| | | 2013 | 2012 |
|---|---|---|---|
| Pension assets (included in other assets) | $ | 2.9 | — |
| Pension liabilities | | (304.9) | (470.3) |

Expected contributions for the defined benefit plans are $56.6 for the year ending June 30, 2014.

The accumulated benefit obligation is $1,183.0 and $1,244.1 at June 30, 2013 and 2012, respectively.



(Continued)

Expected fiscal year benefit payments for all defined benefit plans is as follows:

| | | |
|---|---|---|
| 2014 | $ | 56.2 |
| 2015 | | 55.9 |
| 2016 | | 57.6 |
| 2017 | | 61.7 |
| 2018 | | 65.2 |
| 2019-2023 | | 371.1 |
| Total | $ | 667.7 |

Net periodic pension expense for the years ended June 30, 2013 and 2012 is as follows:

| | | 2013 | 2012 |
|---|---|---|---|
| Service cost – benefits earned during the year | $ | — | 1.4 |
| Interest cost on projected benefit obligation | | 55.9 | 58.7 |
| Return on plan assets | | (65.3) | (59.6) |
| Net amortization and deferral | | — | 0.3 |
| Recognized actuarial loss | | 16.7 | 15.3 |
| Curtailment charges | | — | (0.3) |
| Net periodic pension expense | $ | 7.3 | 15.8 |

The assumptions used in determining net periodic pension expense and accrued pension costs shown above are as follows:

| | 2013 | 2012 |
|---|---|---|
| Discount rates for obligations at year end: | | |
| MedStar Health, Inc. Pension Equity Plan | 5.20% | 4.60% |
| MedStar Health, Inc. Cash Balance Retirement Plan | 5.05 | 4.55 |
| MedStar St. Mary's Hospital Pension Plan | 5.00 | 4.35 |
| Discount rates for pension cost: | | |
| MedStar Health, Inc. Pension Equity Plan – July 1 – June 30 | 4.60% | 5.85% |
| MedStar Health, Inc. Cash Balance Retirement Plan – July 1 – June 30 | 4.55 | 5.70 |
| MedStar St. Mary's Hospital Pension Plan – July 1 – June 30 | 4.35 | 5.60 |
| Expected long-term rate of return on plan assets – PEP and CBRP | 8.00% | 8.25% |
| Expected long-term rate of return on plan assets – MedStar St. Mary's Hospital | 7.50 | 7.75 |
| Rate of compensation increase for pension cost: | | |
| MedStar Health, Inc. Cash Balance Retirement Plan – July 1 – June 30 | N/A | 4.00% |

The Corporation also has various contributory, tax deferred annuity and savings plans with participation available to certain employees. The Corporation matches employee contributions up to 3.0% of compensation in certain plans. The Corporation contributed approximately $26.1 and $23.5 during the years ended June 30, 2013 and 2012, respectively.

## (8) Business and Credit Concentrations

The Corporation provides healthcare services through its inpatient and outpatient care facilities located in the State of Maryland and the District of Columbia and Northern Virginia. The Corporation generally does not require collateral or other security in extending credit; however it routinely obtains assignment of (or is otherwise entitled to receive) patients' benefits receivable under their health insurance programs, plans or policies (e.g., Medicare, Medicaid, Blue Cross, Workers' Compensation, health maintenance organizations (HMOs) and commercial insurance policies).

The Corporation estimates the allowance for uncollectible accounts based on the aging of accounts receivable, historical collection experience, payor mix and other relevant factors. A significant portion of the allowance for uncollectible accounts relates to self-pay patients, as well as co-payments and deductibles owed by patients with insurance. There are various factors that can impact collection trends, such as changes in the economy, which in turn have an impact on unemployment rates and the number of uninsured and underinsured patients. Other factors include the volume of patients through the emergency

departments and the increased level of co-payments and deductibles due from patients with insurance. These factors continuously change and can have an impact on collection trends and the estimation process.

The activity in the allowance for uncollectible accounts is summarized as follows for the years ended June 30, 2013 and 2012:

| | | 2013 | 2012 |
|---|---|---|---|
| Beginning balance | $ | 189.7 | 238.6 |
| Provision for bad debts | | 214.5 | 191.3 |
| Write-offs | | (199.9) | (240.2) |
| Ending balance | $ | 204.3 | 189.7 |

As of June 30, 2013 and 2012, the Corporation's allowance for uncollectible accounts was approximately 27.2% and 26.0%, respectively, as a percentage of patient service receivables. The Corporation's provision for bad debts represents 5.2% and 4.9% of net patient service revenue for the years ended June 30, 2013 and 2012, respectively. In fiscal year 2012, the Corporation had a higher level of write-offs of accounts that were previously reserved, due to the transition of one of the billing services departments to the centralized hospital billing operations.

A summary of net patient service revenue by major category of payor for the years ended June 30, 2013 and 2012 is as follows:

| | 2013 | 2012 |
|---|---|---|
| Medicare and Medicare HMO | 35% | 35% |
| Medicaid and Medicaid HMO | 13 | 14 |
| Carefirst Blue Cross Blue Shield | 18 | 18 |
| Other commercial and managed care payors | 26 | 25 |
| Self-pay | 8 | 8 |
| | 100% | 100% |

A summary of net patient receivables by major category of payor as of June 30, 2013 and 2012 is as follows:

| | 2013 | 2012 |
|---|---|---|
| Medicare and Medicare HMO | 27% | 27% |
| Medicaid and Medicaid HMO | 19 | 19 |
| Carefirst Blue Cross Blue Shield | 13 | 13 |
| Other commercial and managed care payors | 29 | 29 |
| Self-pay | 12 | 12 |
| | 100% | 100% |



(Continued)

Under the Maryland Health Services Cost Review Commission (HSCRC) rate methodology, amounts payable for services in 2013 and 2012 to Maryland hospital patients under the Medicare and Medicaid insurance programs are computed at 94% of regulated charges. This discount amount does not include MCO granted discounts for medical education. Hospital patients under the Blue Cross and approved health maintenance organization insurance programs are computed at 98% of regulated charges. Maryland accounts receivable from these third-party payors have been adjusted to reflect the difference between charges and the payable amounts.

Certain Maryland-based hospital charges are subject to review and approval by the HSCRC. The HSCRC has jurisdiction over hospital reimbursement in Maryland by agreement with the Centers for Medicare and Medicaid Services (CMS). This agreement is based on a waiver from the Medicare Prospective Payment System reimbursement principles granted under Section 1814(b) of the Social Security Act. The waiver will continue as long as cumulative comparisons of cost per admission between Maryland and the nation continue to be favorable. Management believes that the waiver will remain in effect at least through June 30, 2014.

Effective July 1, 2000 through June 30, 2003 under a contract with the HSCRC and the Maryland Hospitals, a charge per case methodology was implemented to more effectively tie compliance standards to waiver performance. Under this methodology, actual charges per case are required to meet hospital specific targets established by the HSCRC, which are adjusted for changes in actual case-mix. The HSCRC and Maryland Hospitals completed a three year contract that expired on June 30, 2006 and has been renewed annually. During the Corporation's 2012 fiscal year, the Maryland Hospitals signed a new three year agreement that changed the charge per case target to a charge per episode target defining episode as inpatient care provided within 30 days. Effective July 1, 2010 the HSCRC modified its rate setting methodologies to expand the use of observation services, which resulted in certain one-day stay cases that used to be considered as inpatient admissions and are now considered as outpatient visits.

Laws and regulations governing the Medicare and Medicaid programs are extremely complex and subject to interpretation. As a result, there is at least a reasonable possibility that recorded estimates will change by a material amount. Management periodically reviews recorded amounts receivable from or payable to third-party payors and may adjust these balances as new information becomes available. In addition, revenue received under certain third-party agreements is subject to audit. During 2013 and 2012, certain of the Corporation's prior year third-party cost reports were audited and settled, or tentatively settled, by third-party payors. Adjustments resulting from such audits and management reviews of unaudited years and open claims are reflected as adjustments to revenue in the year that the adjustment becomes known. The effect of these adjustments was to increase net patient service revenue by $16.1 and $13.4 during the years ended June 30, 2013 and 2012, respectively. Although certain other prior year cost reports submitted to third-party payors remain subject to audit and retroactive adjustment, management does not expect any material adverse settlements.

The Budget Control Act of 2011 (the Budget Control Act) mandated significant reductions and spending caps on the federal budget for fiscal years 2012 through 2021. As part of this legislation, a 2% reduction in Medicare spending, known as Sequestration, was implemented beginning April 1, 2013 and the Corporation's Medicare payments subsequent to that date were reduced by the mandatory 2%. It is not

possible to determine how future congressional actions to reduce the federal deficit in order to end Sequestration will impact the Corporation's revenues.

Through its MedStar Family Choice, Inc. subsidiary, the Corporation enters into fee-for-service and capitation agreements with independent health professionals and organizations to provide covered services to eligible enrollees where such services cannot be provided by its employed physicians or controlled entities. Medical and clinical expenses from these agreements include claim payments, capitation payments, and estimates of outstanding claims liabilities for services provided prior to the balance sheet date. The estimates of outstanding claims liabilities ($17.0 and $12.8 as of June 30, 2013 and 2012, respectively), are based on management's analysis of historical claims paid reports and as well as review of health services utilization during the period. Changes in these estimates are recorded in the period of change. Claims payments and capitation payments are expensed in the period services are provided to eligible enrollees.

## (9) Certain Significant Risks and Uncertainties

The Corporation provides general healthcare services in the State of Maryland, the District of Columbia and Northern Virginia. As a healthcare provider, the Corporation is subject to certain significant inherent risks, including the following:

- Dependence on revenues derived from reimbursement by the Federal Medicare and state Medicaid programs;
- Regulation of hospital rates by the State of Maryland Health Services Cost Review Commission;
- Government regulation, government budgetary constraints and proposed legislative and regulatory changes, and;
- Lawsuits alleging malpractice or other claims.

Such inherent risks require the use of certain management estimates in the preparation of the Corporation's consolidated financial statements and it is reasonably possible that a change in such estimates may occur.

The Medicare and state Medicaid reimbursement programs represent a substantial portion of the Corporation's revenues and the Corporation's operations are subject to a variety of other federal, state and local regulatory requirements. In addition, changes in federal and state reimbursement funding mechanisms and related government budgetary constraints could have a significant adverse effect on the Corporation. Similarly, failure by the Corporation to maintain required regulatory approvals and licenses and/or changes in related regulatory requirements could have a significant adverse effect.

The healthcare industry is subject to numerous laws and regulations from federal, state and local governments, and the government has increased enforcement of Medicare and Medicaid anti-fraud and abuse laws, as well as physician self referral laws (STARK law and regulation). The Corporation's compliance with these laws and regulations is subject to periodic governmental review, which could result in enforcement actions unknown or unasserted at this time. The Corporation is aware of certain asserted and unasserted legal claims by the government, and has provided requested information. The final outcomes of these government investigations cannot be determined at this time.

Recent federal initiatives have prompted a national review of federally funded healthcare programs. To this end, the federal government, and many states, implemented programs to audit and recover potential overpayments to providers from the Medicare and Medicaid programs. Since June 2010, the Corporation's hospitals have received audit requests from the Medicare Recovery Audit Contractor (RAC) program. These RAC audit requests have focused on medical necessity of inpatient admissions and hospital coding practices. In addition, the hospitals have continued to receive routine audit requests from other Medicare contractors and the Office of Inspector General. The Corporation's hospitals have cooperated with each of these audit requests and implemented a program to track and manage their effect.

As a result of recently enacted and pending federal healthcare reform legislation, rules and regulations, substantial changes are occurring in the United States healthcare system. These include numerous provisions affecting the delivery of healthcare services, the financing of healthcare costs, reimbursement to healthcare providers and the legal obligations of health insurers, providers and employers. These provisions are currently slated to take effect at specified times over the next decade. This federal healthcare reform legislation did not significantly affect the 2013 or 2012 consolidated financial statements.

The Corporation, in the normal course of business, is a party to legal and regulatory proceedings. These include a lawsuit filed in June 2011 by several MedStar Washington Hospital Center (MWHC) employees alleging violations by the Corporation of wage-hour laws. The plaintiffs in this action are seeking certification of a class that would include hourly employees at all of the Corporation's hospitals. The Corporation is opposing class certification and taking other steps to defend itself and the hospitals in this litigation. The final outcome of this litigation cannot be determined at this time.

The Corporation, in the normal course of business, is a party to a number of legal and regulatory proceedings. Management does not expect that the results of these proceedings will have a material adverse effect on the consolidated financial position or results of operations of the Corporation.

## (10) Self-Insurance Programs

The Corporation maintains self-insurance programs for professional and general liability risks, employee health and workers' compensation. Estimated liabilities have been recorded based on actuarial estimation of reported and incurred but not reported claims. The combined accrued liabilities for these programs at June 30, 2013 and 2012 were as follows:

| | | 2013 | 2012 |
|---|---|---|---|
| Professional and general liability | $ | 285.9 | 257.7 |
| Employee health | | 21.9 | 18.3 |
| Workers' compensation | | 32.9 | 31.7 |
| Total liabilities | | 340.7 | 307.7 |
| Less current portion | | (87.5) | (79.5) |
| | $ | 253.2 | 228.2 |

The Corporations' self insurance program for professional and general liability is responsible for the following exposures as of June 30, 2013:

(a) For professional liability during the periods of July 1, 2011 to June 30, 2012 and July 1, 2012 to June 30, 2013, for all MedStar entities except MedStar Montgomery Medical Center and MedStar St. Mary's Hospital, the Corporation is responsible for the first $5.0 exposure for each and every claim plus an additional exposure above $5.0 referred to as an "inner aggregate."

For the period July 1, 2011 to December 31, 2012 the applicable inner aggregate was the inner aggregate that was in effect for the 24 month period January 1, 2010 through December 31, 2012. This inner aggregate exposed the Corporation to up to $2.5 per claim above the $5.0 per claim self-insured retention up to a total of $5.0 above the $5.0 per claim self-insured retention for all claims incurred during the period January 1, 2011 through December 31, 2012.

For the period January 1, 2013 to June 30, 2013 the applicable inner aggregate was the inner aggregate that was in effect for the 12 month period January 1, 2013 through December 31, 2013. This inner aggregate exposes the Corporation to up to $3.0 per claim above the $5.0 per claim self-insured retention up to a total of $6.0 above the $5.0 per claim self-insured retention for all claims incurred during the period January 1, 2013 through December 31, 2013.

For MedStar Montgomery Medical Center and MedStar St. Mary's Hospital, the Corporation is responsible for the first $2.0 exposure for each claim (not subject to the inner aggregate structures noted above).

Effective December 10, 2012, Southern Maryland Hospital joined the MedStar Health system as MedStar Southern Maryland Hospital Center (MSMHC). MSMHC is covered for all professional liability exposure for activities on or after December 10, 2012 under the same program of coverage described above. The Corporation did not assume responsibility for Southern Maryland Hospital's prior acts exposure or any tail claims that might arise in future years related to activities that occurred prior to the acquisition by MedStar.

(b) For general liability, the Corporation is responsible for the first $3.0 exposure for each claim (for MedStar Montgomery Medical Center, the first $2.0 exposure for each claim). General liability claims are not subject to the inner aggregate excess retention. MSMHC is covered under the Corporation's general liability program effective December 10, 2012.

(c) Commercial excess re-insurance has been purchased above the self-insured retentions described above in multiple layers and in twin towers for professional and general liability. During the period of July 1, 2011 to December 31, 2012, each tower has seven layers of excess re-insurance coverage which provides coverage of up to $100.0 per claim and $100.0 in the annual aggregate. Effective January 1, 2013, the Corporation purchased an additional layer of commercial excess re-insurance. During the period of January 1, 2013 through June 30, 2013, each tower has eight layers of excess re-insurance which provides coverage of up to $125.0 per claim and $125.0 in the annual aggregate. The Corporation maintains reinsurance contracts with various "A" rated commercial insurance companies.

The professional and general liabilities as of June 30, 2013 and 2012 have been discounted at a rate of 1.75% and 1.25%, respectively. The workers' compensation liabilities as of June 30, 2013 and 2012 have been discounted at a rate of 1.50%.

Assets available to fund these liabilities are held in separate accounts (see note 2). Contributions required to fund professional and general liability, employee health benefits and workers' compensation programs are determined by the plans' administrators based on appropriate actuarial assumptions. The professional and general liability programs are administered through an offshore wholly owned captive insurance company, Greenspring Financial Insurance Limited (GFIL), which is domiciled in the Grand Cayman Islands.

## (11) Unrestricted Net Assets

The Corporation accounts for and presents noncontrolling interests in a consolidated subsidiary as a separate component of the appropriate class of consolidated net assets. The income attributable to noncontrolling interests is included within operating income on the consolidated statements of operations and changes in net assets. The following table presents a reconciliation of the changes in consolidated unrestricted net assets attributable to the Corporation's controlling interest and noncontrolling interest, including amounts such as the performance indicator and other changes in unrestricted net assets as of and for the years ended June 30, 2013 and 2012:

| | MedStar Health, Inc. | Noncontrolling interests | Total unrestricted net assets |
|---|---|---|---|
| Balance as of June 30, 2011 | $ 904.4 | 7.8 | 912.2 |
| Excess of revenues over expenses | 65.7 | 4.2 | 69.9 |
| Change in funded status of defined benefit plans | (250.8) | — | (250.8) |
| Net assets released for property and equipment | 7.6 | — | 7.6 |
| Distributions to noncontrolling interests | — | (3.3) | (3.3) |
| (Decrease) increase in unrestricted net assets | (177.5) | 0.9 | (176.6) |
| Balance as of June 30, 2012 | 726.9 | 8.7 | 735.6 |
| Excess of revenues over expenses | 180.6 | 5.1 | 185.7 |
| Change in funded status of defined benefit plans | 106.9 | — | 106.9 |
| Net assets released for property and equipment and other | 3.0 | 1.9 | 4.9 |
| Distributions to noncontrolling interests | — | (6.3) | (6.3) |
| Increase in unrestricted net assets | 290.5 | 0.7 | 291.2 |
| Balance as of June 30, 2013 | $ 1,017.4 | 9.4 | 1,026.8 |



(Continued)

## (12) Temporarily and Permanently Restricted Net Assets

Temporarily and permanently restricted net assets as of June 30, 2013 and 2012 are available for the following purposes:

| | | 2013 | 2012 |
|---|---|---|---|
| Temporary restrictions: | | | |
| Interest in net assets of foundation | $ | 54.8 | 48.5 |
| Other | | 44.2 | 32.0 |
| | $ | 99.0 | 80.5 |
| Permanent restrictions: | | | |
| Investments to be held in perpetuity, the income from which is available to support healthcare services | $ | 39.1 | 37.4 |

Temporarily restricted net assets are available for the purposes of purchasing property and equipment, providing health education, research and other healthcare services.

## (13) Endowment Net Assets

The Corporation's endowments consist of individual donor-restricted funds established for a variety of purposes. Net assets associated with endowment funds are classified and reported based on the existence or absence of donor-imposed restrictions.

### *(a) Interpretation of Relevant Law*

The Corporation has interpreted the State Prudent Management of Institutional Funds Act (SPMIFA) as requiring the preservation of the fair value of the original gift as of the gift date of the donor-restricted endowment funds absent explicit donor stipulations to the contrary. As a result of this interpretation, the Corporation classifies as permanently restricted net assets (a) the original value of gifts donated to the permanent endowment, (b) the original value of subsequent gifts to the permanent endowment, and (c) accumulations to the permanent endowment made in accordance with the direction of the applicable donor gift instrument at the time the accumulation is added to the fund. The remaining portion of the donor-restricted endowment fund that is not classified in permanently restricted net assets is classified as temporarily restricted net assets until those amounts are appropriated for expenditure by the organization in a manner consistent with the standard of prudence prescribed by SPMIFA. In accordance with SPMIFA, the Corporation considers the following factors in making a determination to appropriate or accumulate donor-restricted endowment funds:

(1) The duration and preservation of the fund

(2) The purposes of the Corporation and the donor-restricted endowment fund

(3) General economic conditions

(4) The possible effect of inflation and deflation

(5) The expected total return from income and the appreciation of investments

(6) Other resources of the Corporation

(7) The investment policies of the Corporation

***(b) Endowment Net Assets Consist of the Following as of June 30, 2013***

| | Unrestricted | Temporarily restricted | Permanently restricted | Total |
|---|---|---|---|---|
| Donor-restricted endowment funds | $ — | 3.6 | 39.1 | 42.7 |
| Total endowed net assets | $ — | 3.6 | 39.1 | 42.7 |

***(c) Endowment Net Assets Consist of the Following as of June 30, 2012***

| | Unrestricted | Temporarily restricted | Permanently restricted | Total |
|---|---|---|---|---|
| Donor-restricted endowment funds | $ (0.4) | 1.4 | 37.4 | 38.4 |
| Total endowed net assets | $ (0.4) | 1.4 | 37.4 | 38.4 |

***(d) Funds with Deficiencies***

From time to time, the fair value of assets associated with individual donor-restricted endowment funds may fall below the level that the donor or SPMIFA requires the Corporation to retain as a fund of perpetual duration. In accordance with U.S. GAAP, deficiencies of this nature that are reported in unrestricted net assets were $0 and $0.4 as of June 30, 2013 and 2012, respectively. These deficiencies resulted from unfavorable market fluctuations.

***(e) Investment Strategies***

The Corporation has adopted policies for corporate investments, including endowment assets, that seek to maximize risk-adjusted returns with preservation of principal. Endowment assets include those assets of donor-restricted funds that the Corporation must hold in perpetuity or for a donor-specified period(s). The endowment assets are invested in a manner that is intended to hold a mix of investment assets designed to meet the objectives of the account. The Corporation expects its

endowment funds, over time, to provide an average rate of return that generates earnings to achieve the endowment purpose.

To satisfy its long-term rate-of-return objectives, the Corporation relies on a total return strategy in which investment returns are achieved through both capital appreciation (realized and unrealized) and current yield (interest and dividends). The Corporation employs a diversified asset allocation structure to achieve its long-term return objectives within prudent risk constraints.

The Corporation monitors the endowment funds returns and appropriates average returns for use. In establishing this practice, the Corporation considered the long-term expected return on its endowment. This is consistent with the Corporation's objective to maintain the purchasing power of the endowment assets held in perpetuity or for a specified term as well as to provide additional real growth through new gifts and investment return.

## (14) Income Taxes

The Corporation and the majority of its subsidiaries are not-for-profit corporations as defined in Section 501(c)(3) of the Internal Revenue Code (the Code) and are exempt from federal income taxes under Section 501(a) of the Code. The Corporation's tax-exempt businesses generate nominal amounts of unrelated business income subject to income tax. For corporate income tax purposes, the Corporation has two consolidated groups of for-profit, taxable entities. The parent companies of these groups are Parkway Ventures, Inc. and MedStar Enterprises, Inc.

The Corporation's taxable subsidiaries have approximately $231.4 of net operating loss (NOL) carryforwards as of June 30, 2013, which expire in varying periods through 2033, available to offset future taxable income. This NOL carryforward represents $87.9 of gross deferred tax assets. In assessing the realizability of deferred tax assets, management considers whether it is more likely than not that some portion or all of the deferred tax assets will not be realized. The ultimate realization of deferred tax assets is dependent upon the generation of future taxable income during the periods in which those temporary differences become deductible. Management considers the scheduled reversal of deferred tax liabilities, projected future taxable income, and tax planning strategies in making this assessment. During the years ended June 30, 2013 and 2012, the Corporation increased its net deferred tax asset by $1.8 and $4.3 respectively, which was recorded in nonoperating income. The remaining amount of the deferred tax asset considered realizable, $31.5 as of June 30, 2013, could be reduced if estimates of future taxable income during the carry forward period are reduced. The current tax provisions for the years ended June 30, 2013 and 2012 were immaterial.

## (15) Charity Care

The Corporation's hospitals utilize a cost to charge ratio methodology to convert charity care to cost. The estimated cost of services provided is determined based on the relationship of total operating costs to gross charges. Total operating costs for purposes of this ratio exclude bad debt expense as well as costs associated with community benefit activities. Total gross patient charges are then offset with any related reimbursements. The Corporation provided $51.5 and $48.2 of charity care at cost during the years ended June 30, 2013 and 2012, respectively, based on the cost to charge ratio.

In addition to charity care, the Corporation funds numerous programs designed to benefit the healthcare interests of the communities it serves, examples of which are: health education programs and services, health information and referral services, school-based clinics, public health screenings and home care. The costs associated with these programs are recorded in the appropriate operating expense categories.

## (16) Leases

The Corporation is obligated under various operating leases with initial terms of one year or more. Aggregate future minimum payments as of June 30, 2013 are as follows:

| | | |
|---|---|---|
| 2014 | $ | 46.6 |
| 2015 | | 32.1 |
| 2016 | | 25.2 |
| 2017 | | 18.9 |
| 2018 | | 13.6 |
| 2019 and thereafter | | 40.2 |
| Total minimum lease payments | $ | 176.6 |

Certain leases include provisions allowing the minimum rental payments to be adjusted annually for increases in operating costs and, in some cases, real estate taxes attributable to leased property. Total rental expense for all operating leases amounted to approximately $56.0 and $59.0 during the years ended June 30, 2013 and 2012, respectively.

## (17) Commitments and Contingencies

In February 2000 and on June 30, 2000, the Corporation and Georgetown University (the University) signed certain definitive agreements whereby the Corporation would receive through purchase or capital lease substantially all of the assets (including working capital) owned by the University that constitutes the MedStar Georgetown University Hospital, the Community Practice Network, the Faculty Practice Group and certain office buildings and a parking lot on the campus (collectively referred to as the Transferred Businesses). These agreements became effective July 1, 2000 and transferred control of the identified physical plant and other real property assets of the Transferred Businesses to the Corporation for use as an academic medical center for a minimum of ninety-eight years. At the end of the one hundred and fifty year lease term (including a fifty-two year renewal), the University shall convey all leased assets, excluding the underlying land, to the Corporation for a nominal amount and enter into a rent-free ground lease for the Corporation's use. This transaction was accounted for under the purchase method of accounting effective July 1, 2000.

In recognition of the value of the transaction, the Corporation shall annually pay the University 50% of the amount by which the combined operating earnings before interest, taxes, depreciation and amortization (EBITDA), as defined in the asset purchase agreement, of certain entities of the Corporation in the Washington D.C. area (collectively referred to as the Washington Clinical Enterprises) exceeds $60.0,

subject to certain adjustments. These additional payments expire when cumulative payments reach $70.0. The Corporation paid $14.5 to the University through the year ended June 30, 2013.

The Corporation also entered into an Academic Affiliation and Operations Agreement (Affiliation Agreement) with the University. The purpose of this agreement is to make available to the University the facilities of the Transferred Businesses and provide the Corporation with a first-class University medical center. The University shall make payments to the Corporation determined by multiplying the University School of Medicine's total undergraduate tuition revenue by 36% for providing teaching services. The Corporation recognized $12.8 and $12.3 of tuition revenue during the years ended June 30, 2013 and 2012, respectively. In support of academic programs at the University, for each fiscal year following the termination of the additional payment terms in the asset purchase agreement described above, the Corporation shall pay to the University 17.5% of the operating EBITDA of the Washington Clinical Enterprises in excess of $60.0, subject to certain adjustments. No amounts have been paid under this Affiliation Agreement through June 30, 2013.

The Corporation and the University also entered into a Research Agreement to sustain and advance a program of health-related University research at the Transferred Business facilities. Under this agreement the University is required to reimburse the Corporation for certain costs incurred by the Corporation in support of University sponsored research. Amounts reimbursed to the Corporation were $3.1 and $3.0 for the years ended June 30, 2013 and 2012, respectively.

MedStar Georgetown University Hospital and the University are parties to a fixed fee shared services agreement. Georgetown University provided to MedStar Georgetown University Hospital the following services: utilities, telephone/IT services, transportation services and library services. Expenses charged for such services were $12.2 and $12.3 for the years ended June 30, 2013 and 2012, respectively.

The MedStar Washington Hospital Center campus is subject to the lien of a Permitted Encumbrance in the amount of $21.5 to the United States government. This encumbrance was created in the deed of the hospital property from the United States government to MedStar Washington Hospital Center in February 1960. There is no repayment date for this lien stated in the deed. Under enabling legislation, repayment could be required after a determination that the property is no longer required for hospital services or the property is disposed of, in which event all or a portion of the lien may be payable to the government. This lien is subordinated to the Deed of Trust on the MedStar Washington Hospital Center campus.

## (18) Functional Expenses

The Corporation considers integrated health services, research and management and general to be its primary functional categories for purposes of expense classification. Management and general include information systems, general corporate management, advertising and marketing. Functional categories of expenses for the years ended June 30, 2013 and 2012 are as follows:

| | | 2013 | 2012 |
|---|---|---|---|
| Integrated health services | $ | 3,319.9 | 3,130.5 |
| Management and general | | 782.9 | 713.1 |
| Research | | 31.0 | 30.9 |
| Fundraising | | 4.6 | 7.8 |
| | $ | 4,138.4 | 3,882.3 |

## (19) Subsequent Events

Management evaluated all events and transactions that occurred after June 30, 2013 and through October 4, 2013. The Corporation did not have any events that were required to be recognized or disclosed.

## Amortization Schedule for MedStar Southern Maryland Hospital Center Certificate of Need Application

| Date | Loan | Payment | Interest Accrued | Interest Paid | Principal Paid | Balance Due | | |
|---|---|---|---|---|---|---|---|---|
| | | | | | | Interest | Principal | Total |
| 2016 | 44,640,237 | 1,450,808 | 1,450,808 | 1,450,808 | 0 | 0 | 44,640,237 | 44,640,237 |
| 2017 | 44,640,237 | 4,129,222 | 4,129,222 | 4,129,222 | 0 | 0 | 89,280,474 | 89,280,474 |
| 2018 | 0 | 6,334,499 | 5,332,016 | 5,332,016 | 1,002,483 | 0 | 88,277,991 | 88,277,991 |
| 2019 | 0 | 6,423,379 | 5,265,173 | 5,265,173 | 1,158,206 | 0 | 87,119,785 | 87,119,785 |
| 2020 | 0 | 6,423,379 | 5,193,737 | 5,193,737 | 1,229,641 | 0 | 85,890,144 | 85,890,144 |
| 2021 | 0 | 6,423,379 | 5,117,896 | 5,117,896 | 1,305,483 | 0 | 84,584,661 | 84,584,661 |
| 2022 | 0 | 6,423,379 | 5,037,376 | 5,037,376 | 1,386,002 | 0 | 83,198,659 | 83,198,659 |
| 2023 | 0 | 6,423,379 | 4,951,891 | 4,951,891 | 1,471,488 | 0 | 81,727,171 | 81,727,171 |
| 2024 | 0 | 6,423,379 | 4,861,133 | 4,861,133 | 1,562,246 | 0 | 80,164,926 | 80,164,926 |
| 2025 | 0 | 6,423,379 | 4,764,777 | 4,764,777 | 1,658,602 | 0 | 78,506,324 | 78,506,324 |
| 2026 | 0 | 6,423,379 | 4,662,478 | 4,662,478 | 1,760,901 | 0 | 76,745,423 | 76,745,423 |
| 2027 | 0 | 6,423,379 | 4,553,869 | 4,553,869 | 1,869,509 | 0 | 74,875,914 | 74,875,914 |
| 2028 | 0 | 6,423,379 | 4,438,562 | 4,438,562 | 1,984,816 | 0 | 72,891,098 | 72,891,098 |
| 2029 | 0 | 6,423,379 | 4,316,143 | 4,316,143 | 2,107,236 | 0 | 70,783,862 | 70,783,862 |
| 2030 | 0 | 6,423,379 | 4,186,173 | 4,186,173 | 2,237,205 | 0 | 68,546,657 | 68,546,657 |
| 2031 | 0 | 6,423,379 | 4,048,187 | 4,048,187 | 2,375,191 | 0 | 66,171,466 | 66,171,466 |
| 2032 | 0 | 6,423,379 | 3,901,691 | 3,901,691 | 2,521,688 | 0 | 63,649,778 | 63,649,778 |
| 2033 | 0 | 6,423,379 | 3,746,159 | 3,746,159 | 2,677,220 | 0 | 60,972,558 | 60,972,558 |
| 2034 | 0 | 6,423,379 | 3,581,034 | 3,581,034 | 2,842,345 | 0 | 58,130,213 | 58,130,213 |
| 2035 | 0 | 6,423,379 | 3,405,724 | 3,405,724 | 3,017,655 | 0 | 55,112,558 | 55,112,558 |
| 2036 | 0 | 6,423,379 | 3,219,602 | 3,219,602 | 3,203,777 | 0 | 51,908,782 | 51,908,782 |
| 2037 | 0 | 6,423,379 | 3,022,000 | 3,022,000 | 3,401,379 | 0 | 48,507,403 | 48,507,403 |
| 2038 | 0 | 6,423,379 | 2,812,210 | 2,812,210 | 3,611,169 | 0 | 44,896,234 | 44,896,234 |
| 2039 | 0 | 6,423,379 | 2,589,481 | 2,589,481 | 3,833,897 | 0 | 41,062,337 | 41,062,337 |
| 2040 | 0 | 6,423,379 | 2,353,015 | 2,353,015 | 4,070,364 | 0 | 36,991,973 | 36,991,973 |
| 2041 | 0 | 6,423,379 | 2,101,964 | 2,101,964 | 4,321,415 | 0 | 32,670,558 | 32,670,558 |
| 2042 | 0 | 6,423,379 | 1,835,428 | 1,835,428 | 4,587,950 | 0 | 28,082,607 | 28,082,607 |
| 2043 | 0 | 6,423,379 | 1,552,453 | 1,552,453 | 4,870,925 | 0 | 23,211,682 | 23,211,682 |
| 2044 | 0 | 6,423,379 | 1,252,025 | 1,252,025 | 5,171,353 | 0 | 18,040,329 | 18,040,329 |
| 2045 | 0 | 6,423,379 | 933,068 | 933,068 | 5,490,311 | 0 | 12,550,018 | 12,550,018 |
| 2046 | 0 | 6,423,379 | 594,437 | 594,437 | 5,828,941 | 0 | 6,721,077 | 6,721,077 |
| 2047 | 0 | 6,423,379 | 234,921 | 234,921 | 6,188,458 | 0 | 532,619 | 532,619 |
| 2048 | 0 | 535,282 | 2,662 | 2,662 | 532,619 | 0 | 0 | 0 |
| Grand Totals | 89,280,474 | 198,727,790 | 109,447,316 | 109,447,316 | 89,280,474 | | | |

*U.S. Rule (no compounding)

Southern Maryland Hospital Center, Inc.
TABLE 1: STATISTICAL PROJECTIONS - ENTIRE FACILITY

| | Two Most Actual Ended Recent Years | | Current Year Projected | Projected Years (ending with first full year at full utilization) | | | | | |
|---|---|---|---|---|---|---|---|---|---|
| CY or FY (Circle) | 2012 | 2013 | 2014 | 2015 | 2016 | 2017 | 2018 | 2019 | 2020 |
| **1. Admissions** | | | | | | | | | |
| a. M/S/G/A | 11,761 | 10,559 | 10,657 | 10,864 | 11,055 | 11,108 | 11,162 | 12,605 | 12,668 |
| b. Pediatric | 118 | 106 | 105 | 105 | 104 | 105 | 106 | 117 | 115 |
| c. Obstetric | 2,223 | 1,996 | 2,014 | 2,054 | 2,090 | 2,100 | 2,110 | 2,383 | 2,395 |
| d. Intensive Care | 1,180 | 1,059 | 1,069 | 1,090 | 1,109 | 1,114 | 1,119 | 1,263 | 1,270 |
| e. Psychiatric | 1,162 | 1,043 | 1,053 | 1,073 | 1,092 | 1,097 | 1,102 | 1,244 | 1,250 |
| f. Rehabilitation | - | - | - | - | - | - | - | - | - |
| g. Chronic/SubAcute | 453 | 492 | 497 | 506 | 515 | 517 | 519 | 586 | 589 |
| h. Other (Nursery) | 1,973 | 1,771 | 1,808 | 1,842 | 1,882 | 1,891 | 1,900 | 1,928 | 1,938 |
| **j. TOTAL (excluding Nursery)** | **16,897** | **15,255** | **15,395** | **15,692** | **15,965** | **16,041** | **16,118** | **18,198** | **18,287** |
| **2. Patient Days** | | | | | | | | | |
| a. M/S/G/A | 45,478 | 42,713 | 43,161 | 43,999 | 44,773 | 44,987 | 45,206 | 51,050 | 51,305 |
| b. Pediatric | 234 | 173 | 171 | 171 | 170 | 170 | 172 | 191 | 187 |
| c. Obstetric | 6,064 | 5,348 | 5,398 | 5,505 | 5,601 | 5,628 | 5,655 | 6,386 | 6,419 |
| d. Intensive Care | 4,633 | 4,633 | 4,672 | 4,742 | 4,802 | 4,824 | 4,845 | 5,444 | 5,448 |
| e. Psychiatric | 5,688 | 4,313 | 4,359 | 4,442 | 4,510 | 4,531 | 4,562 | 5,138 | 5,175 |
| f. Rehabilitation | - | - | - | - | - | - | - | - | - |
| g. Chronic/SubAcute | 6,710 | 7,205 | 7,276 | 7,418 | 7,540 | 7,579 | 7,614 | 8,591 | 8,623 |
| h. Other (Nursery) | 5,582 | 4,999 | 5,099 | 5,194 | 5,307 | 5,333 | 5,358 | 5,437 | 5,465 |
| **j. TOTAL (excluding Nursery)** | **68,807** | **64,385** | **65,037** | **66,277** | **67,396** | **67,719** | **68,054** | **76,800** | **77,157** |
| **3. Average Length of Stay** | | | | | | | | | |
| a. M/S/G/A | 3.9 | 4.0 | 4.1 | 4.0 | 4.1 | 4.0 | 4.0 | 4.0 | 4.0 |
| b. Pediatric | 2.0 | 1.6 | 1.6 | 1.6 | 1.6 | 1.6 | 1.6 | 1.6 | 1.6 |
| c. Obstetric | 2.7 | 2.7 | 2.7 | 2.7 | 2.7 | 2.7 | 2.7 | 2.7 | 2.7 |
| d. Intensive Care | 3.9 | 4.4 | 4.4 | 4.4 | 4.3 | 4.3 | 4.3 | 4.3 | 4.3 |
| e. Psychiatric | 4.9 | 4.1 | 4.1 | 4.1 | 4.1 | 4.1 | 4.1 | 4.1 | 4.1 |
| f. Rehabilitation | - | - | - | - | - | - | - | - | - |
| g. Chronic/SubAcute | 14.8 | 14.6 | 14.6 | 14.7 | 14.6 | 14.7 | 14.7 | 14.7 | 14.6 |
| h. Other (Nursery) | 2.8 | 2.8 | 2.8 | 2.8 | 2.8 | 2.8 | 2.8 | 2.8 | 2.8 |
| **j. TOTAL (excluding Nursery)** | **4.4** | **4.2** | **4.2** | **4.2** | **4.2** | **4.2** | **4.2** | **4.2** | **4.2** |
| **4. Occupancy Percentage*** | | | | | | | | | |
| a. M/S/G/A | 80.4% | 75.0% | 82.1% | 84.3% | 83.4% | 83.3% | 83.1% | 78.1% | 78.1% |
| b. Pediatric | 16.0% | 11.8% | 11.7% | 11.7% | 11.6% | 11.6% | 11.8% | 13.1% | 12.8% |
| c. Obstetric | 55.4% | 48.8% | 49.3% | 50.3% | 51.2% | 51.4% | 51.6% | 58.3% | 58.6% |
| d. Intensive Care | 52.9% | 52.9% | 53.3% | 54.1% | 54.8% | 55.1% | 55.3% | 62.1% | 62.2% |
| e. Psychiatric | 62.3% | 47.3% | 47.8% | 48.7% | 49.4% | 49.7% | 50.0% | 56.3% | 56.7% |
| f. Rehabilitation | - | - | - | - | - | - | - | - | - |
| g. Chronic/SubAcute | 76.6% | 82.2% | 83.1% | 84.7% | 86.1% | 86.5% | 86.9% | 98.1% | 98.4% |
| h. Other (Nursery) | 63.7% | 57.1% | 58.2% | 59.3% | 60.6% | 60.9% | 61.2% | 62.1% | 62.4% |
| **j. TOTAL (excluding nursery)** | **77.8%** | **67.1%** | **71.0%** | **72.6%** | **72.7%** | **72.8%** | **72.8%** | **73.6%** | **73.7%** |
| **5. Number of Licensed Beds** | | | | | | | | | |
| a. M/S/G/A | 155 | 156 | 144 | 143 | 147 | 148 | 149 | 179 | 180 |
| b. Pediatric | 4 | 4 | 4 | 4 | 4 | 4 | 4 | 4 | 4 |
| c. Obstetric | 30 | 30 | 30 | 30 | 30 | 30 | 30 | 30 | 30 |
| d. Intensive Care | 24 | 24 | 24 | 24 | 24 | 24 | 24 | 24 | 24 |
| e. Psychiatric | 25 | 25 | 25 | 25 | 25 | 25 | 25 | 25 | 25 |
| f. Rehabilitation | - | - | - | - | - | - | - | - | - |
| g. Chronic | 24 | 24 | 24 | 24 | 24 | 24 | 24 | 24 | 24 |
| h. Other (Nursery) | 24 | 24 | 24 | 24 | 24 | 24 | 24 | 24 | 24 |
| **j. TOTAL (excluding nursery)** | **262** | **263** | **251** | **250** | **254** | **255** | **256** | **286** | **287** |
| **6. Outpatient Visits** | | | | | | | | | |
| a. Emergency | 66,423 | 65,316 | 65,316 | 66,622 | 67,954 | 69,313 | 70,699 | 74,941 | 76,440 |
| b. Outpatient Dept. (Lab, Rad, PT, STH, OTH) | 64,617 | 66,671 | 66,671 | 70,005 | 73,505 | 77,180 | 81,039 | 85,091 | 89,346 |
| c. Other (PDC, CL) | 7,199 | 5,963 | 5,963 | 6,202 | 6,450 | 6,708 | 6,976 | 7,395 | 7,839 |
| d. Other (SDS) | 6,296 | 5,935 | 5,673 | 5,841 | 6,012 | 6,180 | 6,336 | 6,466 | 6,578 |
| e. Other (observation) | 2,883 | 4,429 | 4,429 | 4,872 | 5,359 | 5,895 | 6,485 | 7,134 | 7,847 |
| **f. TOTAL** | **147,418** | **148,314** | **148,052** | **153,542** | **159,280** | **165,276** | **171,535** | **181,027** | **188,050** |

* Number of beds and occupancy percentage should be reported on the basis of licensed beds.

Southern Maryland Hospital Center, Inc.

TABLE 3: REVENUES AND EXPENSES - ENTIRE FACILITY

| | Two Most Actual Ended Recent Years | | Current Year Projected | Projected Years (ending with first full year at full utilization) | | | | | |
|---|---|---|---|---|---|---|---|---|---|
| CY or FY (Circle) | 2012 | 2013 | 2014 | 2015 | 2016 | 2017 | 2018 | 2019 | 2020 |
| **1. Revenue** | | | | | | | | | |
| a. Inpatient Services | $ 184,149,559 | $ 167,004,215 | $ 159,463,160 | $ 161,420,227 | $ 163,446,606 | $ 163,819,330 | $ 165,244,448 | $ 183,678,099 | $ 191,703,468 |
| b. Outpatient Services | $ 86,487,262 | $ 100,950,594 | $ 103,574,125 | $ 107,071,450 | $ 110,798,360 | $ 110,798,360 | $ 110,798,360 | $ 116,548,950 | $ 120,709,870 |
| c. Gross Patient Services | $ 270,636,821 | $ 267,954,809 | $ 263,037,285 | $ 268,491,677 | $ 274,244,966 | $ 274,617,690 | $ 276,042,808 | $ 300,227,049 | $ 312,413,338 |
| d. Allowance for Bad Debt | $ 14,841,008 | $ 15,671,754 | $ 14,345,397 | $ 15,024,794 | $ 15,346,748 | $ 15,367,606 | $ 15,447,356 | $ 16,800,706 | $ 17,482,650 |
| e. Contractual Allowance | $ 29,096,276 | $ 38,500,483 | $ 39,154,132 | $ 35,803,365 | $ 36,570,566 | $ 36,620,269 | $ 36,810,308 | $ 40,035,277 | $ 41,660,319 |
| f. Charity Care | $ 1,038,183 | $ 2,463,285 | $ 1,208,139 | $ 1,576,046 | $ 1,609,818 | $ 1,612,006 | $ 1,620,371 | $ 1,762,333 | $ 1,833,866 |
| g. Net Patient Services | $ 225,661,354 | $ 211,319,287 | $ 208,329,617 | $ 216,087,472 | $ 220,717,834 | $ 221,017,809 | $ 222,164,773 | $ 241,628,733 | $ 251,436,503 |
| h. Other Operating Revenues (cafeteria, gift shop, med records abstract, telephone) | $ 824,578 | $ 1,132,011 | $ 1,083,016 | $ 1,115,506 | $ 1,148,971 | $ 1,183,440 | $ 1,218,943 | $ 1,183,440 | $ 1,218,943 |
| i. Net Operating Revenue | $ 226,485,932 | $ 212,451,298 | $ 209,412,633 | $ 217,202,978 | $ 221,866,805 | $ 222,201,249 | $ 223,383,716 | $ 242,812,173 | $ 252,655,446 |
| **2. Expenses** | | | | | | | | | |
| a. Salaries, Wages, and Professional Fees, (including fringe benefits) | $ 106,115,073 | $ 116,724,246 | $ 112,046,537 | $ 113,846,486 | $ 115,745,072 | $ 115,868,071 | $ 116,338,360 | $ 124,319,159 | $ 128,340,635 |
| b. Contractual Services | $ 19,689,858 | $ 28,235,612 | $ 13,598,414 | $ 13,871,133 | $ 14,158,798 | $ 14,177,435 | $ 14,248,690 | $ 15,457,902 | $ 16,067,216 |
| c. Interest on Current Debt | $ 1,237,744 | $ 2,412,769 | $ 8,094,955 | $ 7,690,207 | $ 7,305,697 | $ 6,940,412 | $ 6,593,391 | $ 6,263,721 | $ 5,950,535 |
| d. Interest on Project Debtc | $ - | $ - | $ - | $ - | $ - | $ - | $ - | $ 5,265,173 | $ 5,193,737 |
| e. Current Depreciation | $ 5,566,726 | $ 4,599,985 | | | | | | | |
| f. Project Depreciation | $ - | $ - | $ - | $ - | $ - | $ - | $ - | $ 5,128,111 | $ 5,128,111 |
| g. Current Amortization | $ - | $ 1,278,012 | $ 2,019,054 | $ 2,019,054 | $ 2,019,054 | $ 2,019,054 | $ 2,019,054 | $ 2,019,054 | $ 2,019,054 |
| h. Project Amortization | $ - | $ - | $ - | $ - | $ - | $ - | $ - | $ 58,667 | $ 58,667 |
| i. Supplies | $ 42,849,230 | $ 40,409,909 | $ 37,987,810 | $ 38,860,512 | $ 39,781,039 | $ 39,840,675 | $ 40,068,694 | $ 43,938,172 | $ 45,887,978 |
| j. Other Expenses (Management fees, corporate overhead, risk) | $ 37,225,241 | $ 32,593,472 | $ 27,993,755 | $ 28,811,913 | $ 29,674,907 | $ 29,730,816 | $ 29,944,583 | $ 33,572,219 | $ 35,400,162 |
| k. Total Operating Expenses | $ 212,683,872 | $ 226,254,005 | $ 201,740,525 | $ 205,099,305 | $ 208,684,567 | $ 208,576,463 | $ 209,212,772 | $ 236,022,178 | $ 244,046,095 |
| **3. Income** | | | | | | | | | |
| a. Income from Operation | $ 13,802,060 | $ (13,802,707) | $ 7,672,108 | $ 12,103,673 | $ 13,182,238 | $ 13,624,786 | $ 14,170,944 | $ 6,789,995 | $ 8,609,351 |
| b. Non-Operating Income | $ (215,201) | $ 105,417 | $ - | $ - | $ - | $ - | $ - | $ - | $ - |
| c. Subtotal | $ 13,586,859 | $ (13,697,290) | $ 7,672,108 | $ 12,103,673 | $ 13,182,238 | $ 13,624,786 | $ 14,170,944 | $ 6,789,995 | $ 8,609,351 |
| d. Income Taxes | $ - | $ - | $ - | $ - | $ - | $ - | $ - | $ - | $ - |
| e. Net Income [Loss] | $ 13,586,859 | $ (13,697,290) | $ 7,672,108 | $ 12,103,673 | $ 13,182,238 | $ 13,624,786 | $ 14,170,944 | $ 6,789,995 | $ 8,609,351 |
| **4. Patient Mix:** | | | | | | | | | |
| **A. Percent of Total Revenue** | | | | | | | | | |
| 1) Medicare | 39.2% | 41.1% | 41.1% | 41.1% | 41.1% | 41.1% | 41.1% | 41.1% | 41.1% |
| 2) Medicaid | 17.0% | 17.0% | 17.0% | 17.0% | 17.0% | 17.0% | 17.0% | 17.0% | 17.0% |
| 3) Blue Cross | 16.4% | 15.7% | 15.7% | 15.7% | 15.7% | 15.7% | 15.7% | 15.7% | 15.7% |
| 4) Commercial Insurance | 18.0% | 18.0% | 18.0% | 18.0% | 18.0% | 18.0% | 18.0% | 18.0% | 18.0% |
| 5) Self-Pay | 5.5% | 6.1% | 6.1% | 6.1% | 6.1% | 6.1% | 6.1% | 6.1% | 6.1% |
| 6) Other (Specify) | 3.9% | 2.1% | 2.1% | 2.1% | 2.1% | 2.1% | 2.1% | 2.1% | 2.1% |
| 7) TOTAL | 100% | 100% | 100% | 100% | 100% | 100% | 100% | 100% | 100% |
| **B. Percent of Patient Days\Visits\Procedures (as applicable)** | | | | | | | | | |
| 1) Medicare | 39.2% | 39.2% | 39.2% | 39.2% | 39.2% | 39.2% | 39.2% | 41.1% | 41.1% |
| 2) Medicaid | 17.0% | 17.0% | 17.0% | 17.0% | 17.0% | 17.0% | 17.0% | 4.3% | 4.3% |
| 3) Blue Cross | 16.4% | 16.4% | 16.4% | 16.4% | 16.4% | 16.4% | 16.4% | 15.7% | 15.7% |
| 4) Commercial Insurance | 18.0% | 18.0% | 18.0% | 18.0% | 18.0% | 18.0% | 18.0% | 8.1% | 8.1% |
| 5) Self-Pay | 5.5% | 5.5% | 5.5% | 5.5% | 5.5% | 5.5% | 5.5% | 6.1% | 6.1% |
| 6) Other (Specify) | 3.9% | 3.9% | 3.9% | 3.9% | 3.9% | 3.9% | 3.9% | 24.7% | 24.7% |
| 7) TOTAL | 100% | 100% | 100% | 100% | 100% | 100% | 100% | 100% | 100% |

Note 1: Revenues based on actual volumes ('12, '13), MedStar internal budget ('14), or projections using SG2 methodolgy with 2014 as baseline ('15-'20).

Note 2: Expenses based on actual volumes ('12, '13), MedStar internal budget ('14), or projections using SG2 methodolgy with 2014 as baseline amounts ('15-'20).

a - No inflation included

b - Income/Expenses exclude physicians expense and CRNA expense as required by standard accounting practice.

c - Interest capitalized during construction periods and expensed starting in FY 2019

d - Incrementatl revenue on projected volume growth is disounted by 15%

e - Variable expenses related to the incremental volume growth equal 59% of discounted revenue, which was validated with national averages. Allocation is 33% salaries, 5% contracted services, 16% supplies, and 5% other

Southern Maryland Hospital Center, Inc.
TABLE 3: REVENUES AND EXPENSES - ENTIRE FACILITY

| | Two Most Actual Ended Recent Years | | Current Year Projected | Projected Years (ending with first full year at full utilization) | | | | | |
|---|---|---|---|---|---|---|---|---|---|
| CY or FY (Circle) | 2012 | 2013 | 2014 | 2015 | 2016 | 2017 | 2018 | 2019 | 2020 |
| **1. Revenues** | | | | | | | | | |
| a. Inpatient Servicesb | $ 184,149,559 | $ 167,004,215 | $ 162,094,302 | $ 165,100,608 | $ 167,205,878 | $ 167,587,175 | $ 169,045,070 | $ 187,902,695 | $ 196,112,648 |
| b. Outpatient Servicesb | $ 86,487,262 | $ 100,950,594 | $ 105,283,098 | $ 109,512,679 | $ 113,346,722 | $ 113,346,722 | $ 113,346,722 | $ 119,229,576 | $ 123,486,197 |
| c. Gross Patient Services | $ 270,636,821 | $ 267,954,809 | $ 267,377,400 | $ 274,613,287 | $ 280,552,600 | $ 280,933,897 | $ 282,391,792 | $ 307,132,271 | $ 319,598,845 |
| d. Allowance for Bad Debtc | $ 14,841,008 | $ 15,671,754 | $ 14,379,826 | $ 16,273,583 | $ 16,625,547 | $ 16,648,143 | $ 16,734,538 | $ 18,200,658 | $ 18,939,428 |
| e. Contractual Allowancec | $ 29,096,276 | $ 38,500,483 | $ 39,373,395 | $ 38,761,665 | $ 39,628,055 | $ 39,681,913 | $ 39,887,841 | $ 43,382,433 | $ 45,143,337 |
| f. Charity Carec | $ 1,038,183 | $ 2,463,285 | $ 1,208,381 | $ 1,694,364 | $ 1,731,010 | $ 1,733,362 | $ 1,742,357 | $ 1,895,006 | $ 1,971,925 |
| g. Net Patient Services | $ 225,661,354 | $ 211,319,287 | $ 212,415,798 | $ 217,883,675 | $ 222,567,988 | $ 222,870,479 | $ 224,027,056 | $ 243,654,174 | $ 253,544,155 |
| h. Other Operating Revenues (cafeteria, gift shop, med records abstract, telephone)D | $ 824,578 | $ 1,132,011 | $ 1,104,676 | $ 1,137,816 | $ 1,171,950 | $ 1,207,109 | $ 1,243,322 | $ 1,207,109 | $ 1,243,322 |
| i. Net Operating Revenue | $ 226,485,932 | $ 212,451,298 | $ 213,520,474 | $ 219,021,491 | $ 223,739,938 | $ 224,077,588 | $ 225,270,378 | $ 244,861,283 | $ 254,787,477 |
| **2. Expenses** | | | | | | | | | |
| a. Salaries, Wages, and Professional Fees, (including fringe benefits)d | $ 106,115,073 | $ 116,724,246 | $ 114,287,468 | $ 116,123,416 | $ 118,059,973 | $ 118,185,432 | $ 118,665,127 | $ 126,805,542 | $ 130,907,448 |
| b. Contractual Servicesd | $ 19,689,858 | $ 28,235,612 | $ 13,870,382 | $ 14,148,556 | $ 14,441,974 | $ 14,460,984 | $ 14,533,664 | $ 15,767,060 | $ 16,388,560 |
| c. Interest on Current Debt | $ 1,237,744 | $ 2,412,769 | $ 8,094,955 | $ 7,690,207 | $ 7,305,697 | $ 6,940,412 | $ 6,593,391 | $ 6,263,721 | $ 5,950,535 |
| d. Interest on Project Debte | $ - | $ - | $ - | $ - | $ - | $ - | $ - | $ 5,265,173 | $ 5,193,737 |
| e. Current Depreciation | $ 5,566,726 | $ 4,599,985 | | | | | | | |
| f. Project Depreciation | $ - | $ - | $ - | $ - | $ - | $ - | $ - | $ 5,128,111 | $ 5,128,111 |
| g. Current Amortization | $ - | $ 1,278,012 | $ 2,019,054 | $ 2,019,054 | $ 2,019,054 | $ 2,019,054 | $ 2,019,054 | $ 2,019,054 | $ 2,019,054 |
| h. Project Amortization | $ - | $ - | $ - | $ - | $ - | $ - | $ - | $ 58,667 | $ 58,667 |
| i. Suppliesd | $ 42,849,230 | $ 40,409,909 | $ 38,747,566 | $ 38,860,512 | $ 39,781,039 | $ 39,840,675 | $ 40,068,694 | $ 43,938,172 | $ 45,887,978 |
| j. Other Expenses (Management fees, corporate overhead, risk)d | $ 37,225,241 | $ 32,593,472 | $ 27,993,755 | $ 28,811,913 | $ 29,674,907 | $ 29,730,816 | $ 29,944,583 | $ 33,572,219 | $ 35,400,162 |
| k. Total Operating Expenses | $ 212,683,872 | $ 226,254,005 | $ 205,013,180 | $ 207,653,658 | $ 211,282,644 | $ 211,177,373 | $ 211,824,513 | $ 238,817,719 | $ 246,934,252 |
| **3. Income** | | | | | | | | | |
| a. Income from Operation | $ 13,802,060 | $ (13,802,707) | $ 8,507,294 | $ 11,367,833 | $ 12,457,294 | $ 12,900,215 | $ 13,445,865 | $ 6,043,564 | $ 7,853,225 |
| b. Non-Operating Income | $ (215,201) | $ 105,417 | $ - | $ - | $ - | $ - | $ - | $ - | $ - |
| c. Subtotal | $ 13,586,859 | $ (13,697,290) | $ 8,507,294 | $ 11,367,833 | $ 12,457,294 | $ 12,900,215 | $ 13,445,865 | $ 6,043,564 | $ 7,853,225 |
| d. Income Taxes | $ - | $ - | $ - | $ - | $ - | $ - | $ - | $ - | $ - |
| e. Net Income (Loss) | $ 13,586,859 | $ (13,697,290) | $ 8,507,294 | $ 11,367,833 | $ 12,457,294 | $ 12,900,215 | $ 13,445,865 | $ 6,043,564 | $ 7,853,225 |
| **4. Patient Mix:** | | | | | | | | | |
| **A. Percent of Total Revenue** | | | | | | | | | |
| 1) Medicare | 39.2% | 41.1% | 41.1% | 41.1% | 41.1% | 41.1% | 41.1% | 41.1% | 41.1% |
| 2) Medicaid | 17.0% | 17.0% | 17.0% | 17.0% | 17.0% | 17.0% | 17.0% | 17.0% | 17.0% |
| 3) Blue Cross | 16.4% | 15.7% | 15.7% | 15.7% | 15.7% | 15.7% | 15.7% | 15.7% | 15.7% |
| 4) Commercial Insurance | 18.0% | 18.0% | 18.0% | 18.0% | 18.0% | 18.0% | 18.0% | 18.0% | 18.0% |
| 5) Self-Pay | 5.5% | 6.1% | 6.1% | 6.1% | 6.1% | 6.1% | 6.1% | 6.1% | 6.1% |
| 6) Other (Specify) | 3.9% | 2.1% | 2.1% | 2.1% | 2.1% | 2.1% | 2.1% | 2.1% | 2.1% |
| 7) TOTAL | 100% | 100% | 100% | 100% | 100% | 100% | 100% | 100% | 100% |
| **B. Percent of Patient Days\Visits\Procedures (as applicable)** | | | | | | | | | |
| 1) Medicare | 39.2% | 39.2% | 39.2% | 39.2% | 39.2% | 39.2% | 39.2% | 41.1% | 41.1% |
| 2) Medicaid | 17.0% | 17.0% | 17.0% | 17.0% | 17.0% | 17.0% | 17.0% | 4.3% | 4.3% |
| 3) Blue Cross | 16.4% | 16.4% | 16.4% | 16.4% | 16.4% | 16.4% | 16.4% | 15.7% | 15.7% |
| 4) Commercial Insurance | 18.0% | 18.0% | 18.0% | 18.0% | 18.0% | 18.0% | 18.0% | 8.1% | 8.1% |
| 5) Self-Pay | 5.5% | 5.5% | 5.5% | 5.5% | 5.5% | 5.5% | 5.5% | 6.1% | 6.1% |
| 6) Other (Specify) | 3.9% | 3.9% | 3.9% | 3.9% | 3.9% | 3.9% | 3.9% | 24.7% | 24.7% |
| 7) TOTAL | 100% | 100% | 100% | 100% | 100% | 100% | 100% | 100% | 100% |

Note 1: Revenues based on actual volumes ('12, '13), MedStar internal budget ('14), or projections using SG2 methodology with 2014 as baseline ('15-'20).

Note 2: Expenses based on actual volumes ('12, '13), MedStar internal budget ('14), or projections using SG2 methodology with 2014 as baseline amounts ('15-'20).

Note 3: The below rate increases and inflation for revenue and expenses are internal assumption being utilized by MedStar corporate in their internal multi-year projections:

a - Income/Expenses exclude physicians expense and CRNA expense as required by standard accounting practice.

b - Inflation of 1.65% in 2014, 2.28% in 2015, and 2.3% in 2016 - 2020

c - Inflation equals 50% of the inflation of revenue allocated between allowance for bad debt, contractual allowance and charity chare.

d - Inflation of 2%

e - Interest capitalized during construction periods and expensed starting in FY 2019

f - Incremental revenue on projected volume growth is discounted by 15%

g - Variable expenses related to the incremental volume growth equal 59% of discounted revenue, which was validated with national averages. Allocation is 33% salaries, 5% contracted services, 16% supplies, and 5% other.

**Southern Maryland Hospital Center, Inc.**

TABLE 3: REVENUES AND EXPENSES - ENTIRE FACILITY

| | Two Most Actual Ended Recent Years | | Current Year Projected | Projected Years (ending with first full year at full utilization) | | | | | |
|---|---|---|---|---|---|---|---|---|---|
| CY or FY (Circle) | 2012 | 2013 | 2014 | 2015 | 2016 | 2017 | 2018 | 2019 | 2020 |
| **1. Revenueab** | | | | | | | | | |
| a. Inpatient Services | $ 184,149,559 | $ 167,004,215 | $ 158,881,517 | $ 160,032,733 | $ 161,224,721 | $ 161,443,970 | $ 162,282,275 | $ 173,125,599 | $ 177,846,404 |
| b. Outpatient Services | $ 86,487,262 | $ 100,950,594 | $ 103,574,125 | $ 105,631,375 | $ 107,823,675 | $ 107,823,675 | $ 107,823,675 | $ 111,206,375 | $ 113,653,975 |
| c. Gross Patient Services | $ 270,636,821 | $ 267,954,809 | $ 262,455,642 | $ 265,664,108 | $ 269,048,396 | $ 269,267,645 | $ 270,105,950 | $ 284,331,974 | $ 291,500,379 |
| d. Allowance for Bad Debt | $ 14,841,008 | $ 15,671,754 | $ 14,345,397 | $ 14,877,190 | $ 15,066,710 | $ 15,078,988 | $ 15,125,933 | $ 15,922,591 | $ 16,324,021 |
| e. Contractual Allowance | $ 29,096,276 | $ 38,500,483 | $ 39,154,132 | $ 35,455,532 | $ 35,907,199 | $ 35,936,460 | $ 36,048,340 | $ 37,946,945 | $ 38,903,641 |
| f. Charity Care | $ 1,038,183 | $ 2,463,285 | $ 1,208,139 | $ 1,562,105 | $ 1,582,005 | $ 1,583,294 | $ 1,588,223 | $ 1,671,872 | $ 1,714,022 |
| g. Net Patient Services | $ 225,661,354 | $ 211,319,287 | $ 207,747,974 | $ 213,769,281 | $ 216,492,482 | $ 216,668,903 | $ 217,343,454 | $ 228,790,566 | $ 234,558,695 |
| h. Other Operating Revenues (cafeteria, gift shop, med records abstract, telephone) | $ 824,578 | $ 1,132,011 | $ 1,083,016 | $ 1,115,506 | $ 1,148,971 | $ 1,183,440 | $ 1,218,943 | $ 1,183,440 | $ 1,218,943 |
| i. Net Operating Revenue | $ 226,485,932 | $ 212,451,298 | $ 208,830,990 | $ 214,884,787 | $ 217,641,453 | $ 217,852,343 | $ 218,562,397 | $ 229,974,006 | $ 235,777,638 |
| **2. Expensesab** | | | | | | | | | |
| a. Salaries, Wages, and Professional Fees, (including fringe benefits) | $ 106,115,073 | $ 116,724,246 | $ 111,854,595 | $ 112,913,389 | $ 114,030,204 | $ 114,102,556 | $ 114,379,197 | $ 119,073,785 | $ 121,439,359 |
| b. Contractual Services | $ 19,689,858 | $ 28,235,612 | $ 13,594,259 | $ 13,850,937 | $ 14,121,680 | $ 14,139,220 | $ 14,206,284 | $ 15,344,366 | $ 15,917,838 |
| c. Interest on Current Debt | $ 1,237,744 | $ 2,412,769 | $ 8,094,955 | $ 7,690,207 | $ 7,305,697 | $ 6,940,412 | $ 6,593,391 | $ 6,263,721 | $ 5,950,535 |
| d. Interest on Project Debtc | $ - | $ - | $ - | $ - | $ - | $ - | $ - | $ 5,265,173 | $ 5,193,737 |
| e. Current Depreciation | $ 5,566,726 | $ 4,599,985 | | | | | | | |
| f. Project Depreciation | $ - | $ - | $ - | $ - | $ - | $ - | $ - | $ 5,128,111 | $ 5,128,111 |
| g. Current Amortization | $ - | $ 1,278,012 | $ 2,019,054 | $ 2,019,054 | $ 2,019,054 | $ 2,019,054 | $ 2,019,054 | $ 2,019,054 | $ 2,019,054 |
| h. Project Amortization | $ - | $ - | $ - | $ - | $ - | $ - | $ - | $ 58,667 | $ 58,667 |
| i. Supplies | $ 42,849,230 | $ 40,409,909 | $ 38,210,496 | $ 39,943,067 | $ 41,770,583 | $ 41,888,977 | $ 42,341,662 | $ 50,023,715 | $ 53,894,654 |
| j. Other Expenses (Management fees, corporate overhead, risk) | $ 37,225,241 | $ 32,593,472 | $ 27,906,508 | $ 28,387,779 | $ 28,895,422 | $ 28,928,310 | $ 29,054,055 | $ 31,187,958 | $ 32,263,219 |
| k. Total Operating Expenses | $ 212,683,872 | $ 226,254,005 | $ 201,679,867 | $ 204,804,433 | $ 208,142,640 | $ 208,018,529 | $ 208,593,643 | $ 234,364,550 | $ 241,865,174 |
| **3. Income** | | | | | | | | | |
| a. Income from Operation | $ 13,802,060 | $ (13,802,707) | $ 7,151,123 | $ 10,080,354 | $ 9,498,813 | $ 9,833,814 | $ 9,968,754 | $ (4,390,544) | $ (6,087,536) |
| b. Non-Operating Income | $ (215,201) | $ 105,417 | $ - | $ - | $ - | $ - | $ - | $ - | $ - |
| c. Subtotal | $ 13,586,859 | $ (13,697,290) | $ 7,151,123 | $ 10,080,354 | $ 9,498,813 | $ 9,833,814 | $ 9,968,754 | $ (4,390,544) | $ (6,087,536) |
| d. Income Taxes | $ - | $ - | $ - | $ - | $ - | $ - | $ - | $ - | $ - |
| e. Net Income (Loss) | $ 13,586,859 | $ (13,697,290) | $ 7,151,123 | $ 10,080,354 | $ 9,498,813 | $ 9,833,814 | $ 9,968,754 | $ (4,390,544) | $ (6,087,536) |
| **4. Patient Mix:** | | | | | | | | | |
| **A. Percent of Total Revenue** | | | | | | | | | |
| 1) Medicare | 39.2% | 41.1% | 41.1% | 41.1% | 41.1% | 41.1% | 41.1% | 41.1% | 41.1% |
| 2) Medicaid | 17.0% | 17.0% | 17.0% | 17.0% | 17.0% | 17.0% | 17.0% | 17.0% | 17.0% |
| 3) Blue Cross | 16.4% | 15.7% | 15.7% | 15.7% | 15.7% | 15.7% | 15.7% | 15.7% | 15.7% |
| 4) Commercial Insurance | 18.0% | 18.0% | 18.0% | 18.0% | 18.0% | 18.0% | 18.0% | 18.0% | 18.0% |
| 5) Self-Pay | 5.5% | 6.1% | 6.1% | 6.1% | 6.1% | 6.1% | 6.1% | 6.1% | 6.1% |
| 6) Other (Specify) | 3.9% | 2.1% | 2.1% | 2.1% | 2.1% | 2.1% | 2.1% | 2.1% | 2.1% |
| 7) TOTAL | 100% | 100% | 100% | 100% | 100% | 100% | 100% | 100% | 100% |
| **B. Percent of Patient Days\Visits\Procedures (as applicable)** | | | | | | | | | |
| 1) Medicare | 39.2% | 39.2% | 39.2% | 39.2% | 39.2% | 39.2% | 39.2% | 41.1% | 41.1% |
| 2) Medicaid | 17.0% | 17.0% | 17.0% | 17.0% | 17.0% | 17.0% | 17.0% | 4.3% | 4.3% |
| 3) Blue Cross | 16.4% | 16.4% | 16.4% | 16.4% | 16.4% | 16.4% | 16.4% | 15.7% | 15.7% |
| 4) Commercial Insurance | 18.0% | 18.0% | 18.0% | 18.0% | 18.0% | 18.0% | 18.0% | 8.1% | 8.1% |
| 5) Self-Pay | 5.5% | 5.5% | 5.5% | 5.5% | 5.5% | 5.5% | 5.5% | 6.1% | 6.1% |
| 6) Other (Specify) | 3.9% | 3.9% | 3.9% | 3.9% | 3.9% | 3.9% | 3.9% | 24.7% | 24.7% |
| 7) TOTAL | 100% | 100% | 100% | 100% | 100% | 100% | 100% | 100% | 100% |

Note 1: Revenues based on actual volumes ('12, '13), MedStar internal budget ('14), or projections using SG2 methodology with 2014 as baseline ('15-'20).

Note 2: Expenses based on actual volumes ('12, '13), MedStar internal budget ('14), or projections using SG2 methodology with 2014 as baseline amounts ('15-'20).

a - No inflation included

b - Income/Expenses exclude physicians expense and CRNA expense as required by standard accounting practice.

c - Interest capitalized during construction periods and expensed starting in FY 2019

d - Incremental revenue on projected volume growth is discounted by 50%

e - Variable expenses related to the incremental volume growth equaled 100% of discounted revenue, which is the most conservative stance. Allocation was 33% salaries, 8% contracted services, 54% supplies, and 5% other.

**Southern Maryland Hospital Center, Inc.**
**TABLE 3: REVENUES AND EXPENSES - ENTIRE FACILITY**

| | Two Most Actual Ended Recent Years | | Current Year Projected | Projected Years (ending with first full year at full utilization) | | | | | |
|---|---|---|---|---|---|---|---|---|---|
| CY or FY (Circle) | 2012 | 2013 | 2014 | 2015 | 2016 | 2017 | 2018 | 2019 | 2020 |
| **1. Revenue** | | | | | | | | | |
| a. Inpatient Services[b] | $ 184,149,559 | $ 167,004,215 | $ 161,503,062 | $ 163,681,479 | $ 164,932,890 | $ 165,157,181 | $ 166,014,767 | $ 177,107,488 | $ 181,936,871 |
| b. Outpatient Services[b] | $ 86,487,262 | $ 100,950,594 | $ 105,283,098 | $ 108,039,770 | $ 110,303,620 | $ 110,303,620 | $ 110,303,620 | $ 113,764,122 | $ 116,268,016 |
| c. Gross Patient Services | $ 270,636,821 | $ 267,954,809 | $ 266,786,160 | $ 271,721,249 | $ 275,236,510 | $ 275,460,801 | $ 276,318,387 | $ 290,871,610 | $ 298,204,887 |
| d. Allowance for Bad Debt[c] | $ 14,841,008 | $ 15,671,754 | $ 14,379,826 | $ 16,113,070 | $ 16,321,525 | $ 16,334,825 | $ 16,385,680 | $ 17,248,686 | $ 17,683,550 |
| e. Contractual Allowancec | $ 29,096,276 | $ 38,500,483 | $ 39,373,395 | $ 38,383,344 | $ 38,907,433 | $ 38,939,139 | $ 39,060,367 | $ 41,117,611 | $ 42,154,243 |
| f. Charity Carec | $ 1,038,183 | $ 2,463,285 | $ 1,208,381 | $ 1,679,237 | $ 1,700,962 | $ 1,702,348 | $ 1,707,648 | $ 1,797,587 | $ 1,842,906 |
| g. Net Patient Services | $ 225,661,354 | $ 211,319,287 | $ 211,824,558 | $ 215,545,598 | $ 218,306,590 | $ 218,484,489 | $ 219,164,692 | $ 230,707,726 | $ 236,524,188 |
| h. Other Operating Revenues (cafeteria, gift shop, med records abstract, telephone)[D] | $ 824,578 | $ 1,132,011 | $ 1,104,676 | $ 1,137,816 | $ 1,171,950 | $ 1,207,109 | $ 1,243,322 | $ 1,207,109 | $ 1,243,322 |
| i. Net Operating Revenue | $ 226,485,932 | $ 212,451,298 | $ 212,929,234 | $ 216,683,414 | $ 219,478,540 | $ 219,691,598 | $ 220,408,014 | $ 231,914,835 | $ 237,767,510 |
| **2. Expenses** | | | | | | | | | |
| a. Salaries, Wages, and Professional Fees, (including fringe benefits)[d] | $ 106,115,073 | $ 116,724,246 | $ 114,091,687 | $ 115,171,657 | $ 116,310,808 | $ 116,384,607 | $ 116,666,781 | $ 121,455,261 | $ 123,868,146 |
| b. Contractual Services[d] | $ 19,689,858 | $ 28,235,612 | $ 13,866,144 | $ 14,127,956 | $ 14,404,114 | $ 14,422,004 | $ 14,490,410 | $ 15,651,253 | $ 16,236,195 |
| c. Interest on Current Debt | $ 1,237,744 | $ 2,412,769 | $ 8,094,955 | $ 7,690,207 | $ 7,305,697 | $ 6,940,412 | $ 6,593,391 | $ 6,263,721 | $ 5,950,535 |
| d. Interest on Project Debt[e] | $ - | $ - | $ - | $ - | $ - | $ - | $ - | $ 5,265,173 | $ 5,193,737 |
| e. Current Depreciation | $ 5,566,726 | $ 4,599,985 | | | | | | | |
| f. Project Depreciation | $ - | $ - | $ - | $ - | $ - | $ - | $ - | $ 5,128,111 | $ 5,128,111 |
| g. Current Amortization | $ - | $ 1,278,012 | $ 2,019,054 | $ 2,019,054 | $ 2,019,054 | $ 2,019,054 | $ 2,019,054 | $ 2,019,054 | $ 2,019,054 |
| h. Project Amortization | $ - | $ - | $ - | $ - | $ - | $ - | $ - | $ 58,667 | $ 58,667 |
| i. Suppliesd | $ 42,849,230 | $ 40,409,909 | $ 38,974,706 | $ 39,943,067 | $ 41,770,583 | $ 41,888,977 | $ 42,341,662 | $ 50,023,715 | $ 53,894,654 |
| j. Other Expenses (Management fees, corporate overhead, risk)[d] | $ 37,225,241 | $ 32,593,472 | $ 27,906,508 | $ 28,387,779 | $ 28,895,422 | $ 28,928,310 | $ 29,054,055 | $ 31,187,958 | $ 32,263,219 |
| k. Total Operating Expenses | $ 212,683,872 | $ 226,254,005 | $ 204,953,054 | $ 207,339,720 | $ 210,705,678 | $ 210,583,364 | $ 211,165,353 | $ 237,052,913 | $ 244,612,318 |
| **3. Income** | | | | | | | | | |
| a. Income from Operation | $ 13,802,060 | $ (13,802,707) | $ 7,976,180 | $ 9,343,694 | $ 8,772,862 | $ 9,108,234 | $ 9,242,661 | $ (5,138,078) | $ (6,844,808) |
| b. Non-Operating Income | $ (215,201) | $ 105,417 | $ - | $ - | $ - | $ - | $ - | $ - | $ - |
| c. Subtotal | $ 13,586,859 | $ (13,697,290) | $ 7,976,180 | $ 9,343,694 | $ 8,772,862 | $ 9,108,234 | $ 9,242,661 | $ (5,138,078) | $ (6,844,808) |
| d. Income Taxes | $ - | $ - | $ - | $ - | $ - | $ - | $ - | $ - | $ - |
| e. Net Income (Loss) | $ 13,586,859 | $ (13,697,290) | $ 7,976,180 | $ 9,343,694 | $ 8,772,862 | $ 9,108,234 | $ 9,242,661 | $ (5,138,078) | $ (6,844,808) |
| **4. Patient Mix:** | | | | | | | | | |
| **A. Percent of Total Revenue** | | | | | | | | | |
| 1) Medicare | 39.2% | 41.1% | 41.1% | 41.1% | 41.1% | 41.1% | 41.1% | 41.1% | 41.1% |
| 2) Medicaid | 17.0% | 17.0% | 17.0% | 17.0% | 17.0% | 17.0% | 17.0% | 17.0% | 17.0% |
| 3) Blue Cross | 16.4% | 15.7% | 15.7% | 15.7% | 15.7% | 15.7% | 15.7% | 15.7% | 15.7% |
| 4) Commercial Insurance | 18.0% | 18.0% | 18.0% | 18.0% | 18.0% | 18.0% | 18.0% | 18.0% | 18.0% |
| 5) Self-Pay | 5.5% | 6.1% | 6.1% | 6.1% | 6.1% | 6.1% | 6.1% | 6.1% | 6.1% |
| 6) Other (Specify) | 3.9% | 2.1% | 2.1% | 2.1% | 2.1% | 2.1% | 2.1% | 2.1% | 2.1% |
| 7) TOTAL | 100% | 100% | 100% | 100% | 100% | 100% | 100% | 100% | 100% |
| **B. Percent of Patient Days\Visits\Procedures (as applicable)** | | | | | | | | | |
| 1) Medicare | 39.2% | 39.2% | 39.2% | 39.2% | 39.2% | 39.2% | 39.2% | 41.1% | 41.1% |
| 2) Medicaid | 17.0% | 17.0% | 17.0% | 17.0% | 17.0% | 17.0% | 17.0% | 4.3% | 4.3% |
| 3) Blue Cross | 16.4% | 16.4% | 16.4% | 16.4% | 16.4% | 16.4% | 16.4% | 15.7% | 15.7% |
| 4) Commercial Insurance | 18.0% | 18.0% | 18.0% | 18.0% | 18.0% | 18.0% | 18.0% | 8.1% | 8.1% |
| 5) Self-Pay | 5.5% | 5.5% | 5.5% | 5.5% | 5.5% | 5.5% | 5.5% | 6.1% | 6.1% |
| 6) Other (Specify) | 3.9% | 3.9% | 3.9% | 3.9% | 3.9% | 3.9% | 3.9% | 24.7% | 24.7% |
| 7) TOTAL | 100% | 100% | 100% | 100% | 100% | 100% | 100% | 100% | 100% |

Note 1 Revenues based on actual volumes ('12, '13), MedStar internal budget ('14), or projections using SG2 methodology with 2014 as baseline ('15-'20).

Note 2: Expenses based on actual volumes ('12, '13), MedStar internal budget ('14), or projections using SG2 methodology with 2014 as baseline amounts ('15-'20).

Note 3: The below rate increases and inflation for revenue and expenses are internal assumption being utilized by MedStar corporate in their internal multi-year projections.

a - Income/Expenses exclude physicians expense and CRNA expense as required by standard accounting practice.

b - Inflation of 1.65% in 2014, 2.28% in 2015, and 2.3% in 2016 - 2020

c - Inflation equals 50% of the inflation of revenue allocated between allowance for bad debt, contractual allowance and charity share

d - Inflation of 2%

e - Interest capitalized during construction periods and expensed starting in FY 2019

f - Incremental revenue on projected volume growth is discounted by 50%

g - Variable expenses related to the incremental volume growth equaled 100% of discounted revenue, which is the most conservative stance. Allocation was 33% salaries, 8% contracted services, 54% supplies, and 5% other.